Tongyu Communication Inc.

RF COMPONENTS

2017

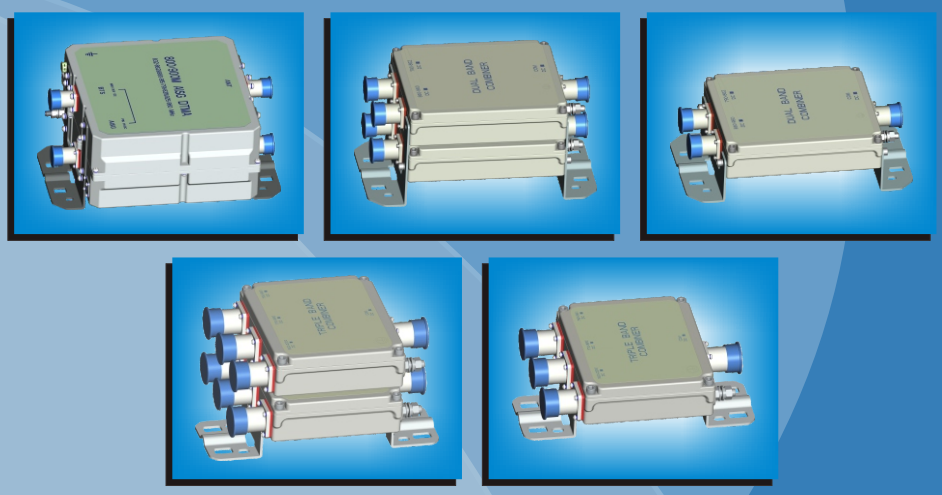

- TMA(Tower Mounted Amplifier)
- Single Unit Combiner
- Double Unit Combiner
- System Components

Tongyu Communication Inc.

Tongyu is trying to lead the antenna market in the future

关于通宇 About Tongyu

Tongyu Zhongshan Headquarter

Tongyu Zhongshan Factory 1

Tongyu Zhongshan Factory 2

Tongyu Technology Inc. is a global designer and manufacturer of antenna systems, providing comprehensive solutions for wireless infrastructure. As an ISO, CE, ETSI compliance organization, we are serving distributors, system integrators, operators globally.

Our sales network and service are represented on six continents, such as Indonesia, Russia, Spain, Turkey, Australia, United States of America and Brazil.

Till now, more than 5,000,000 antennas have been deployed in the global network.

All material in the catalogue, including, without limitation, all copyrights, trademarks, artwork, images and other elements (collectively, the “content”), are protected by copyrights and other intellectual properly rights owned and controlled by Tongyu Technology.

Tongyu Technology reserves the right to change, modify, or correct the information contained in the catalogue at any time without notice.

CONTENT

03

TY-GSM850-12-CWA ---- 04
TY-TMA0006F1V5 ---- 06
TY-EGSM900-12-CWA ---- 08
TY-DTMAE900-12-AISG ---- 10
TY-GSM1800-12-CWA ---- 12
TY-DTMA1800-12-AISG ---- 14
TY-GSM1900-12-CWA ---- 16
TY-DTMA1900-12-AISG ---- 18
TY-TMA0003F1V3 ---- 20
TY-DTMA2100-12-AISG ---- 22
TY-DTMA2600-12-AISG ---- 24
TY-T08D001(F1V1) ---- 26
TY-T09D001(F1V1) ---- 28
TY-T08D002(F1V1) ---- 30
TY-T09D002(F1V1) ---- 32

Single Unit Combiner ---- 34

TY-DBC0012(F1Vx) ---- 35
TY-DBC0012(F4Vx) ---- 37
TY-DBC1821 ---- 39
TY-TBC091821 ---- 41
TY-C002S001(F1V2) ---- 43
TY-C002S004(F1V1) ---- 45
TY-C022S001(F1V2) ---- 47
TY-C022S002(F1V2) ---- 49
TY-C022S003(F1V2) ---- 51
TY-C122S001(F1V2) ---- 53
TY-C122S002(F1V2) ---- 55
TY-C122S003(F1V2) ---- 57
TY-C222S001(F1V1) ---- 59
TY-C023S001(F1V2) ---- 61
TY-C023S002(F1V2) ---- 63
TY-C023S004(F1Vx) ---- 65
TY-C123S002(F1V2) ---- 67
TY-C024S001(F1V2) ---- 69

Double Unit Combiner ---- 71

TYT-DBC0012F1Vx ---- 72
TYT-DBC0012F4Vx ---- 74
TYT-DBC1821 ---- 76
TYT-TBC091821 ---- 78
TYT-C002D001(F1V2) ---- 80
TYT-C022D001(F1V2) ---- 82
TYT-C022D002(F1V2) ---- 84
TYT-C022D003(F1V2) ---- 86
TYT-C122D001(F1V2) ---- 88
TYT-C122D002(F1V2) ---- 90
TYT-C122D003(F1V2) ---- 92
TYT-C023D001(F1V2) ---- 94
TYT-C023D002(F1V2) ---- 96
TYT-C023D004(F1Vx) ---- 98
TYT-C123D002(F1V2) ---- 100
TYT-C024D001(F1V2) ---- 102

System Components ---- 104

TYBT-0822O/TYBT-0822 ---- 105
TYBT-0822S-12/24-XXX ---- 107

Indoor Combiner ---- 109

TY-CDC0727-08-N ---- 110
TY-CPS0727-02-N ---- 111
TY-CDC0727-08-N ---- 112

AISG2.0 REMOTE CONTROL COMPONENT - 113

TY-RCUB20(F1V3) ---- 114
TY-RCUB20(F1V4) ---- 116
TY-HCUB20 ---- 118
TY-CCUA20 ---- 121

Application Example ---- 123

TMA APPLICATION ---- 124
COMBINER APPLICATION ---- 125
RCU APPLICATION ---- 126
HCU APPLICATION ---- 129
CCU APPLICATION ---- 130

TMA

TMA(Tower Mounted Amplifier)	
TY-GSM850-12-CWA	04-05
TY-TMA0006F1V5	06-07
TY-EGSM900-12-CWA	08-09
TY-DTMAE900-12-AISG	10-11
TY-GSM1800-12-CWA	12-13
TY-DTMA1800-12-AISG	14-15
TY-GSM1900-12-CWA	16-17
TY-DTMA1900-12-AISG	18-19
TY-TMA0003F1V3	20-21
TY-DTMA2100-12-AISG	22-23
TY-DTMA2600-12-AISG	24-25
TY-T08D001(F1V1)	26-27
TY-T09D001(F1V1)	28-29
TY-T08D002(F1V1)	30-31
TY-T09D002(F1V1)	32-33

TY-GSM850-12-CWA

TMA Twin Single duplex 850MHz Full Band 12 dB CWA

ELECTRICAL SPECIFICATIONS	
RX Frequency Range (MHz)	824 -849
RX Rejection	>70 dB
RX Gain(dB)	12±1
RX Return Loss	⩾18dB
RX Noise Figure	1.6 dB, Typical
RX Output 3rd Order Intercept Point(dBm)	+24, Typical
RX Bypass Insertion Loss(dB)	2.5 dB max
RX Bypass Return Loss(dB)	⩾14 dB
RX Max Input Power (dBm)	+10 dBm
TX Frequency Range (MHz)	869-894
TX Return Loss	⩾18 dB
TX Insertion Loss (dB)	0.4 Typical,0.58 max
Intermodulation	<-110 dBm (@ 2x43 dBm Tx carriers,IM3 at 844MHz)
Input Voltage (V)	current window alarm mode: 9 -15
Alarm Functionality	current window alarm mode with 200-250 mA alarm current
Power Consumption	@12 VDC, 1.5W per LNA
Peek Power	≥58.6 dBm

MECHANICAL SPECIFICATIONS	
Dimension HxWxD mm (body)	217x127x90mm
Weight	<4.1 kg
Colors	Light grey
RF Connectors	DIN 7/16 Female
Mounting Kit	Mounting kit for pole and wall included

ENVIRONMENTAL SPECIFICATIONS	
Temperature Range	-40°C to +65°C
Operational	ETS 300 019-1-4
Transportation	ETS 300 019-1-2
Storage	ETS 300 019-1-1
Lightning Protection	IEC61000-4-5
Housing	Aluminum
MTBF	>500,000 hours per TMA
Ingress Protection	IP66(Water jetting test)

APPROVAL AND TESTS	
Safety	EN 60950
EMC	ETSI EN 301 489-1

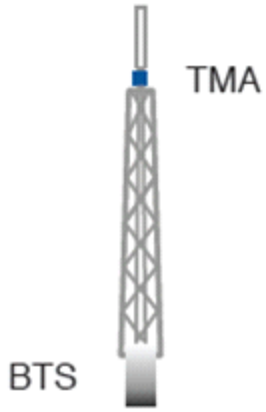

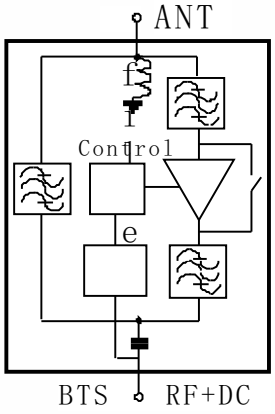

TY-TMA0006F1V5

TMA Twin Single duplex 900MHz Full Band 12 dB CWA

ELECTRICAL SPECIFICATIONS	
RX Frequency Range (MHz)	890 -915
RX Rejection	>70 dB
X Gain(dB)	12±1
RX Return Loss	≥18 dB
RX Noise Figure	1.6 dB, Typical
RX Output 3rd Order Intercept Point(dBm)	+24, Typical
RX Bypass Insertion Loss(dB)	2.5 dB max
RX Bypass Return Loss(dB)	≥14 dB
RX Max Input Power (dBm)	+10 dBm
TX Frequency Range (MHz)	935-960
TX Return Loss	≥18 dB
TX Insertion Loss (dB)	0.4 Typical,0.50 max
Intermodulation	<-110 dBm (@ 2x43 dBm Tx carriers,IM3 at 910MHz)
Input Voltage (V)	current window alarm mode: 9 -15
Alarm Functionality	current window alarm mode with 200-250 mA alarm current
Power Consumption	@12 VDC, 1.5W per LNA
Peek Power	≥58.6 dBm

MECHANICAL SPECIFICATIONS	
Dimension HxWxD mm (body)	217x127x90mm
Weight	<4.1 kg
Colors	Light grey
RF Connectors	DIN 7/16 Female
Mounting Kit	Mounting kit for pole and wall included

ENVIRONMENTAL SPECIFICATIONS	
Temperature Range	-40°C to +65°C
Operational	ETS 300 019-1-4
Transportation	ETS 300 019-1-2
Storage	ETS 300 019-1-1
Lightning Protection	IEC61000-4-5
Housing	Aluminum
MTBF	>500,000 hours per TMA
Ingress Protection	IP66(Water jetting test)

APPROVAL AND TESTS	
Safety	EN 60950
EMC	ETSI EN 301 489-1

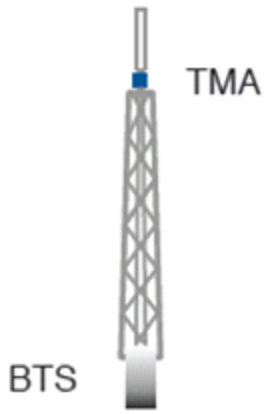

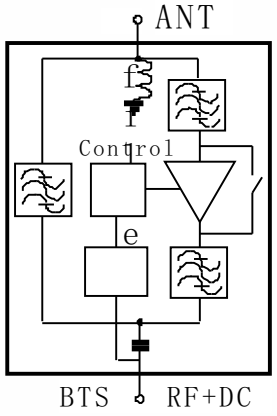

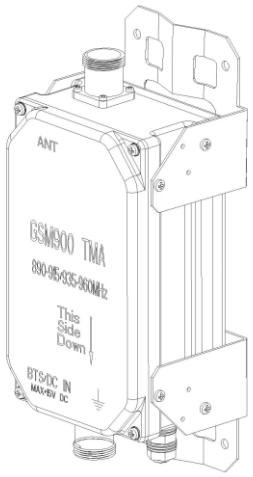

TY-EGSM900-12-CWA

TMA Twin Single duplex EGSM900 Full Band 12 dB CWA

ELECTRICAL SPECIFICATIONS	
RX Frequency Range (MHz)	880 -915
RX Rejection	>65 dB
RX Gain(dB)	12±1
RX Return Loss	≥18 dB
RX Noise Figure	1.6 dB, Typical
RX Output 3rd Order Intercept Point(dBm)	+24, Typical
RX Bypass Insertion Loss(dB)	2.8 dB max
RX Bypass Return Loss(dB)	≥14 dB
RX Max Input Power (dBm)	+10 dBm
TX Frequency Range (MHz)	925-960
TX Return Loss	≥18 dB
TX Insertion Loss (dB)	0.50 Typical,0.70 max
Intermodulation	<-110 dBm (@ 2x43 dBm Tx carriers,IM3 at 910MHz)
Input Voltage (V)	current window alarm mode: 9 -15
Alarm Functionality	current window alarm mode with 200-250 mA alarm current
Power Consumption	@12 VDC, 1.5W per LNA
Peek Power	≥58.6 dBm

MECHANICAL SPECIFICATIONS	
Dimension HxWxD mm (body)	236x191x87mm
Weight	<5.9 kg
Colors	Light grey
RF Connectors	DIN 7/16 Female
Mounting Kit	Mounting kit for pole and wall included

ENVIRONMENTAL SPECIFICATIONS	
Temperature Range	-40°C to +65°C
Operational	ETS 300 019-1-4
Transportation	ETS 300 019-1-2
Storage	ETS 300 019-1-1
Lightning Protection	IEC61000-4-5
Housing	Aluminum
MTBF	>500,000 hours per TMA
Ingress Protection	IP66(Water jetting test)

APPROVAL AND TESTS	
Safety	EN 60950
EMC	ETSI EN 301 489-1

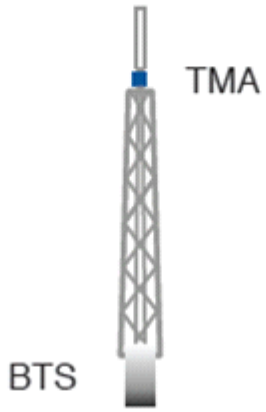

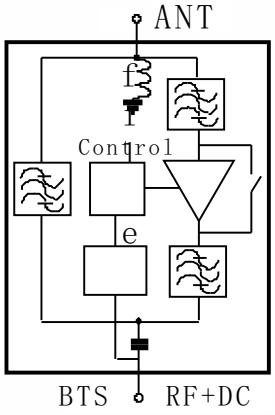

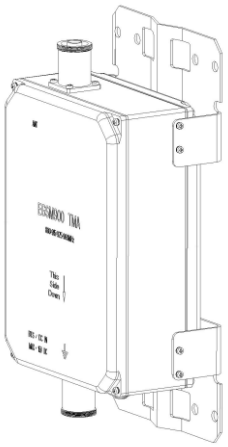

TY-DTMAE900-12-AISG

TMA Twin Dual duplex EGSM900 Full Band 12 dB AISG

ELECTRICAL SPECIFICATIONS	
RX Frequency Range (MHz)	880 -915
RX Rejection	>71 dB
RX Gain(dB)	12±1
RX Return Loss	⩾18 dB
RX Noise Figure	1.8 dB, Typical
RX Output 3rd Order Intercept Point(dBm)	+25, Typical
RX Bypass Insertion Loss(dB)	2.8 dB max
RX Bypass Return Loss(dB)	⩾14 dB
RX Max Input Power (dBm)	+10 dBm
TX Frequency Range (MHz)	925-960
TX Return Loss	⩾18 dB
TX Insertion Loss (dB)	0.6 Typical,0.8 max
Intermodulation	<-110 dBm (@ 2x43 dBm Tx carriers,IM3 at 910MHz)
Input Voltage (V)	current window alarm mode: 10 -15 AISG1.1/AISG2.0 mode：10-30
Alarm Functionality	current window alarm mode with 160-200 mA alarm current AISG1.1/AISG2.0 mode：160-200mA
Power Consumption	@12 VDC, 1.5W per LNA
Power Handling, RMS	≥58.6 dBm

MECHANICAL SPECIFICATIONS	
Dimension HxWxD mm (body)	311x281x78mm
Weight	<8.7 kg
Colors	Light grey
RF Connectors	DIN 7/16 Female
Mounting Kit	Mounting kit for pole and wall included

ENVIRONMENTAL SPECIFICATIONS	
Temperature Range	-40°C to +65°C
Operational	ETS 300 019-1-4
Transportation	ETS 300 019-1-2
Storage	ETS 300 019-1-1
Lightning Protection	IEC61000-4-5
Housing	Aluminum
MTBF	>500,000 hours per TMA
Ingress Protection	IP66(Water jetting test)

APPROVAL AND TESTS	
Safety	EN 60950
EMC	ETSI EN 301 489-1

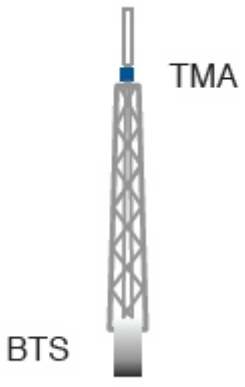

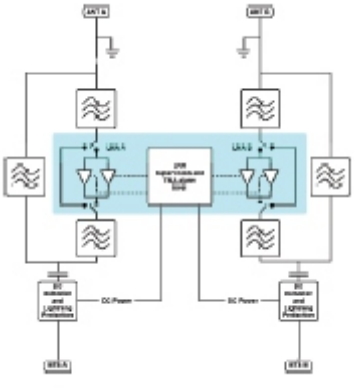

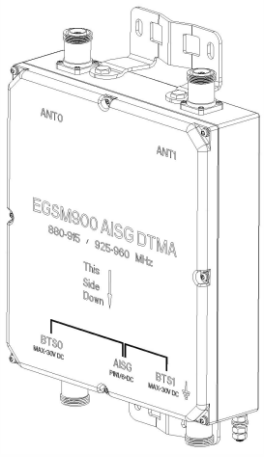

TY-GSM1800-12-CWA

TMA Twin Dual duplex 1800MHz Full Band 12 dB CWA

ELECTRICAL SPECIFICATIONS	
RX Frequency Range (MHz)	1710 -1785
RX Rejection	>65 dB
RX Gain(dB)	12±1
RX Return Loss	≥18 dB
RX Noise Figure	1.8 dB, Typical
RX Output 3rd Order Intercept Point(dBm)	+24, Typical
RX Bypass Insertion Loss(dB)	3.3 dB max
RX Bypass Return Loss(dB)	≥14 dB
RX Max Input Power (dBm)	+10 dBm
TX Frequency Range (MHz)	1805-1880
TX Return Loss	≥18 dB
TX Insertion Loss (dB)	0.6 Typical,0.8 max
Intermodulation	<-110 dBm (@ 2x43 dBm Tx carriers,IM3 at 1730MHz)
Input Voltage (V)	current window alarm mode: 10 -15
Alarm Functionality	current window alarm mode with 200-250 mA alarm current
Power Consumption	@12 VDC, 1.5W per LNA
Peek Power	≥58.6 dBm

MECHANICAL SPECIFICATIONS	
Dimension HxWxD mm (body)	243x218x69mm
Weight	<6.2 kg
Colors	Light grey
RF Connectors	DIN 7/16 Female
Mounting Kit	Mounting kit for pole and wall included

ENVIRONMENTAL SPECIFICATIONS	
Temperature Range	-40°C to +65°C
Operational	ETS 300 019-1-4
Transportation	ETS 300 019-1-2
Storage	ETS 300 019-1-1
Lightning Protection	IEC61000-4-5
Housing	Aluminum
MTBF	>500,000 hours per TMA
Ingress Protection	IP66(Water jetting test)

APPROVAL AND TESTS	
Safety	EN 60950
EMC	ETSI EN 301 489-1

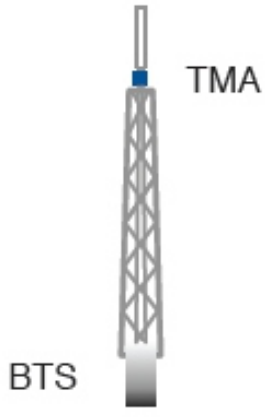

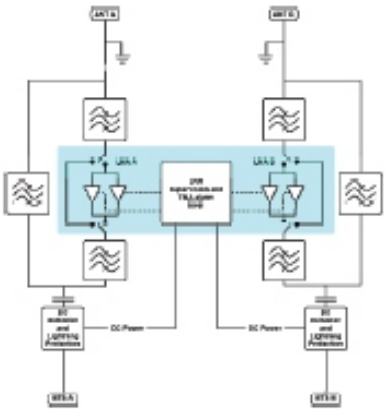

TY-DTMA1800-12-AISG

TMA Twin Dual duplex 1800MHz Full Band 12 dB AISG

ELECTRICAL SPECIFICATIONS	
RX Frequency Range (MHz)	1710 -1785
RX Rejection	>65 dB
RX Gain(dB)	12±1
RX Return Loss	⩾18 dB
RX Noise Figure	1.9 dB, Typical
RX Output 3rd Order Intercept Point(dBm)	+25, Typical
RX Bypass Insertion Loss(dB)	3.3 dB max
RX Bypass Return Loss(dB)	⩾14 dB
RX Max Input Power (dBm)	+10 dBm
TX Frequency Range (MHz)	1805-1880
TX Return Loss	⩾18 dB
TX Insertion Loss (dB)	0.6 Typical,0.8 max
Intermodulation	<-110 dBm (@ 2x43 dBm Tx carriers,IM3 at 1730MHz)
Input Voltage (V)	current window alarm mode: 10 -15 AISG1.1/AISG2.0 mode：10-30
Alarm Functionality	current window alarm mode with 160-200 mA alarm current AISG1.1/AISG2.0 mode：160-200mA
Power Consumption	@12 VDC, 1.5W per LNA
Power Handling, RMS	≥58.6 dBm

MECHANICAL SPECIFICATIONS	
Dimension HxWxD mm (body)	243x218x69mm
Weight	<6.2 kg
Colors	Light grey
RF Connectors	DIN 7/16 Female
Mounting Kit	Mounting kit for pole and wall included

ENVIRONMENTAL SPECIFICATIONS	
Temperature Range	-40°C to +65°C
Operational	ETS 300 019-1-4
Transportation	ETS 300 019-1-2
Storage	ETS 300 019-1-1
Lightning Protection	IEC61000-4-5
Housing	Aluminum
MTBF	>500,000 hours per TMA
Ingress Protection	IP66(Water jetting test) or Ip67

APPROVAL AND TESTS	
Safety	EN 60950
EMC	ETSI EN 301 489-1

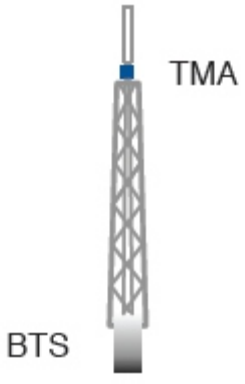

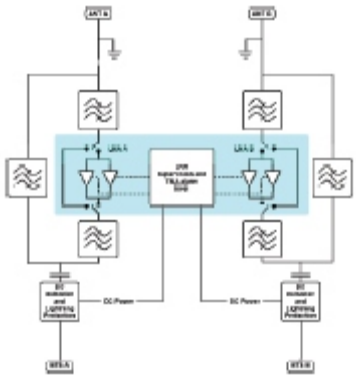

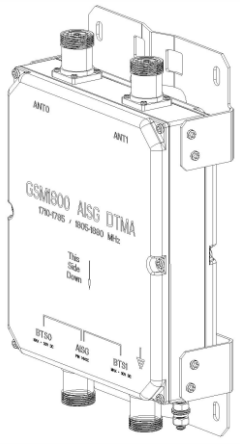

TY-GSM1900-12-CWA

TMA Twin Dual duplex 1900MHz Full Band 12 dB CWA

ELECTRICAL SPECIFICATIONS	
RX Frequency Range (MHz)	1850 -1910
RX Rejection	>65 dB
RX Gain(dB)	12±1
RX Return Loss	≥18 dB
RX Noise Figure	1.8 dB, Typical
RX Output 3rd Order Intercept Point(dBm)	+24, Typical
RX Bypass Insertion Loss(dB)	3.3 dB max
RX Bypass Return Loss(dB)	≥14 dB
RX Max Input Power (dBm)	+10 dBm
TX Frequency Range (MHz)	1930-1990
TX Return Loss	≥18 dB
TX Insertion Loss (dB)	0.6 Typical,0.8 max
Intermodulation	<-110 dBm (@ 2x43 dBm Tx carriers,IM3 at 1870MHz)
Input Voltage (V)	current window alarm mode: 10 -15
Alarm Functionality	current window alarm mode with 200-250 mA alarm current
Power Consumption	@12 VDC, 1.5W per LNA
Peek Power	≥58.6 dBm

MECHANICAL SPECIFICATIONS	
Dimension HxWxD mm (body)	243x218x69mm
Weight	<6.2 kg
Colors	Light grey
RF Connectors	DIN 7/16 Female
Mounting Kit	Mounting kit for pole and wall included

ENVIRONMENTAL SPECIFICATIONS	
Temperature Range	-40°C to +65°C
Operational	ETS 300 019-1-4
Transportation	ETS 300 019-1-2
Storage	ETS 300 019-1-1
Lightning Protection	IEC61000-4-5
Housing	Aluminum
MTBF	>500,000 hours per TMA
Ingress Protection	IP66(Water jetting test)

APPROVAL AND TESTS	
Safety	EN 60950
EMC	ETSI EN 301 489-1

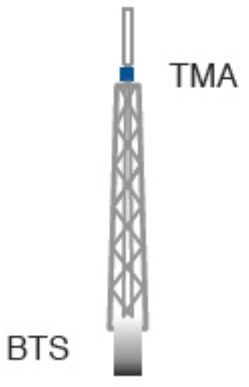

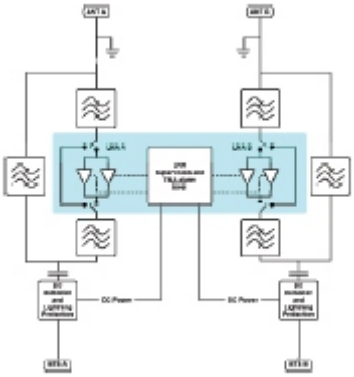

TY-DTMA1900-12-AISG

TMA Twin Dual duplex 1900MHz Full Band 12 dB AISG

ELECTRICAL SPECIFICATIONS	
RX Frequency Range (MHz)	1850 -1910
RX Rejection	>71 dB
RX Gain(dB)	12±1
RX Return Loss	⩾18 dB
RX Noise Figure	1.8 dB, Typical
RX Output 3rd Order Intercept Point(dBm)	+25, Typical
RX Bypass Insertion Loss(dB)	3.3 dB max
RX Bypass Return Loss(dB)	⩾14 dB
RX Max Input Power (dBm)	+10 dBm
TX Frequency Range (MHz)	1930-1990
TX Return Loss	⩾18 dB
TX Insertion Loss (dB)	0.6 Typical,0.8 max
Intermodulation	<-110 dBm (@ 2x43 dBm Tx carriers,IM3 at 1870MHz)
Input Voltage (V)	current window alarm mode: 10 -15 AISG1.1/AISG2.0 mode：10-30
Alarm Functionality	current window alarm mode with 160-200 mA alarm current AISG1.1/AISG2.0 mode：160-200mA
Power Consumption	@12 VDC, 1.5W per LNA
Power Handling, RMS	≥58.6 dBm

MECHANICAL SPECIFICATIONS	
Dimension HxWxD mm (body)	255x218x69mm
Weight	<6.2 kg
Colors	Light grey
RF Connectors	DIN 7/16 Female
Mounting Kit	Mounting kit for pole and wall included

ENVIRONMENTAL SPECIFICATIONS	
Temperature Range	-40°C to +65°C
Operational	ETS 300 019-1-4
Transportation	ETS 300 019-1-2
Storage	ETS 300 019-1-1
Lightning Protection	IEC61000-4-5
Housing	Aluminum
MTBF	>500,000 hours per TMA
Ingress Protection	IP66(Water jetting test)

APPROVAL AND TESTS	
Safety	EN 60950
EMC	ETSI EN 301 489-1

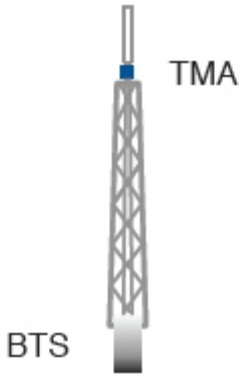

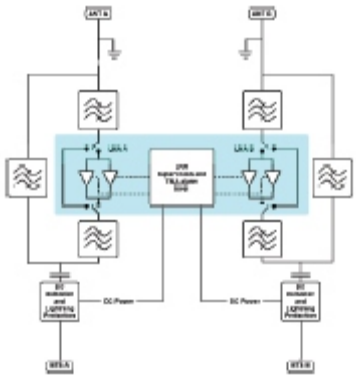

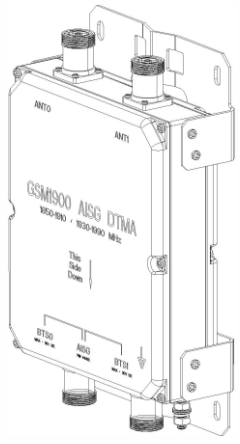

TY-TMA0003F1V3

TMA Twin Dual duplex 2100MHz Full Band 12 dB AISG

ELECTRICAL SPECIFICATIONS	
RX Frequency Range (MHz)	1920 -1980
RX Rejection	>65 dB
RX Gain(dB)	12±1
RX Return Loss	≥18 dB
RX Noise Figure	1.2 dB, Typical 1.8dB.max
RX Output 3rd Order Intercept Point(dBm)	+25, Typical
RX Bypass Insertion Loss(dB)	3.6 dB max
RX Bypass Return Loss(dB)	≥12 dB
RX Max Input Power (dBm)	+10 dBm
TX Frequency Range (MHz)	2110-2170
TX Return Loss	≥18 dB
TX Insertion Loss (dB)	0.35 Typical,0.55 max
Intermodulation	<-120 dBm (@ 2x43 dBm Tx carriers,IM7 at 1930MHz)
Input Voltage (V)	current window alarm mode: 9 -15 AISG1.1 mode□ 9-15
Alarm Functionality	current window alarm mode with 200-250 mA alarm current AISG1.1 mode：200-250mA
Power Consumption	@12 VDC, 1.5W per LNA
Peek Power	≥58.6 dBm

MECHANICAL SPECIFICATIONS	
Dimension HxWxD mm (body)	236x168x51mm
Weight	<4.4 kg
Colors	Light grey
RF Connectors	DIN 7/16 Female
Mounting Kit	Mounting kit for pole and wall included

ENVIRONMENTAL SPECIFICATIONS	
Temperature Range	-40°C to +65°C
Operational	ETS 300 019-1-4
Transportation	ETS 300 019-1-2
Storage	ETS 300 019-1-1
Lightning Protection	IEC61000-4-5
Housing	Aluminum
MTBF	>500,000 hours per TMA
Ingress Protection	IP66(Water jetting test)

APPROVAL AND TESTS	
Safety	EN 60950
EMC	ETSI EN 301 489-1

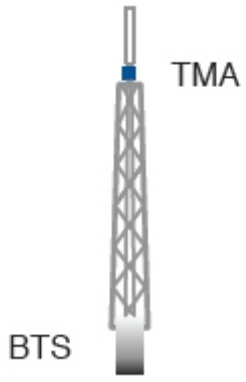

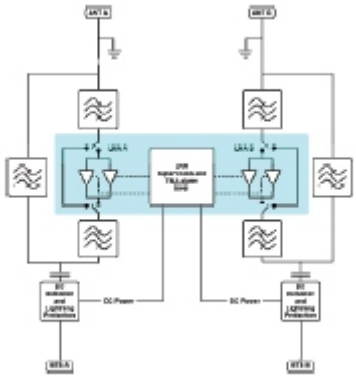

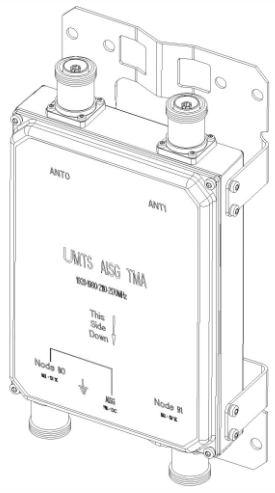

TY-DTMA2100-12-AISG

TMA Twin Dual duplex 2100MHz Full Band 12 dB AISG

ELECTRICAL SPECIFICATIONS	
RX Frequency Range (MHz)	1920 -1980
RX Rejection	>65 dB
RX Gain(dB)	12±0.9
RX Return Loss	≥18 dB
RX Noise Figure	1.6 dB, Typical
RX Output 3rd Order Intercept Point(dBm)	+25, Typical
RX Bypass Insertion Loss(dB)	3.3 dB max
RX Bypass Return Loss(dB)	≥12 dB
RX Max Input Power (dBm)	+10 dBm
TX Frequency Range (MHz)	2110-2170
TX Return Loss	≥18 dB
TX Insertion Loss (dB)	0.35 Typical,0.55 max
Intermodulation	<-120 dBm (@ 2x43 dBm Tx carriers,IM7 at 1930MHz)
Input Voltage (V)	current window alarm mode: 10 -15 AISG1.1/2.0 mode： 10-30
Alarm Functionality	current window alarm mode with 160-200 mA alarm current AISG1.1/2.0 mode： 160-200mA
Power Consumption	@12 VDC, 1.5W per LNA
Power Handling, RMS	≥58.6 dBm

MECHANICAL SPECIFICATIONS	
Dimension HxWxD mm (body)	236x168x51mm
Weight	<4.6 kg
Colors	Light grey
RF Connectors	DIN 7/16 Female
Mounting Kit	Mounting kit for pole and wall included

ENVIRONMENTAL SPECIFICATIONS	
Temperature Range	-40°C to +65°C
Operational	ETS 300 019-1-4
Transportation	ETS 300 019-1-2
Storage	ETS 300 019-1-1
Lightning Protection	IEC61000-4-5
Housing	Aluminum
MTBF	>500,000 hours per TMA
Ingress Protection	IP66(Water jetting test) or IP67

APPROVAL AND TESTS	
Safety	EN 60950
EMC	ETSI EN 301 489-1

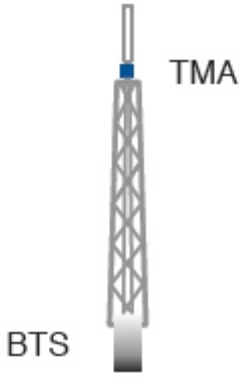

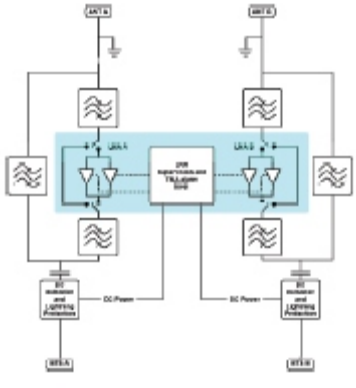

TY-DTMA2600-12-AISG

TMA Twin Dual duplex 2600MHz Full Band 12 dB AISG

ELECTRICAL SPECIFICATIONS	
RX Frequency Range (MHz)	2500 -2570
RX Rejection	>65 dB
RX Gain(dB)	12±1
RX Return Loss	⩾18 dB
RX Noise Figure	1.5 dB, Typical
RX Output 3rd Order Intercept Point(dBm)	+25, Typical
RX Bypass Insertion Loss(dB)	3.0 dB max
RX Bypass Return Loss(dB)	⩾14 dB
RX Max Input Power (dBm)	+10 dBm
TX Frequency Range (MHz)	2620-2690
TX Return Loss	⩾18 dB
TX Insertion Loss (dB)	0.4 Typical,0.5 max
Intermodulation	<-107 dBm (@ 2x43 dBm Tx carriers,IM7 at 2550MHz)
Input Voltage (V)	current window alarm mode: 10 -15 AISG1.1/AISG2.0 mode：10-30
Alarm Functionality	current window alarm mode with 160-200 mA alarm current AISG1.1/AISG2.0 mode：160-200mA
Power Consumption	@12 VDC, 1.5W per LNA
Peek Power	⩾58.6 dBm

MECHANICAL SPECIFICATIONS

Dimension HxWxD mm (body)	236x166x66.5mm
Weight	<6.0 kg
Colors	Light grey
RF Connectors	DIN 7/16 Female
Mounting Kit	Mounting kit for pole and wall included

ENVIRONMENTAL SPECIFICATIONS

Temperature Range	-40°C to +65°C
Operational	ETS 300 019-1-4
Transportation	ETS 300 019-1-2
Storage	ETS 300 019-1-1
Lightning Protection	IEC61000-4-5
Housing	Aluminum
MTBF	>500,000 hours per TMA
Ingress Protection	IP66(Water jetting test) or IP67

APPROVAL AND TESTS

Safety	EN 60950
EMC	ETSI EN 301 489-1

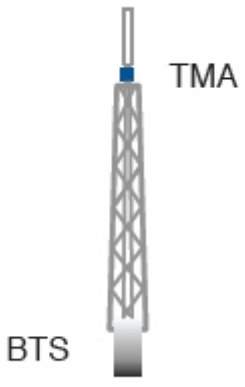

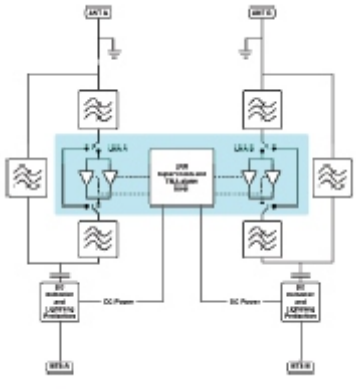

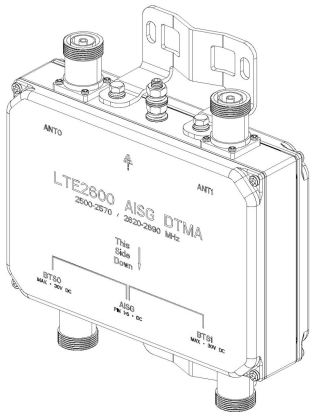

TY-T08D001(F1V1)

850MHz TMA Twin Dual duplex 32dB AISG

ELECTRICAL SPECIFICATIONS	
RX Frequency Range (MHz)	824 -849
RX Rejection	>71 dB
RX Gain(dB)	32±1.0
RX Gain ripple	≤1.0dB
RX Return Loss	≥16 dB
RX Noise Figure	≤2.2dB
RX output 3rd order intercept point (dBm)	+37.2dBm Typical
RX Bypass Insertion Loss(dB)	≤4.0 dB
RX Bypass Return Loss(dB)	≥12 dB
TX Frequency Range (MHz)	869-894
TX Return Loss	≥18 dB
TX Insertion Loss (dB)	≤0.8dB
Intermodulation	<-110dBm (@ 2x43dBm)
Input Voltage (V)	current window alarm mode: 7 -15 AISG2.0 mode： 10-32
Power Handling(peak)	≥58.6 dBm

MECHANICAL SPECIFICATIONS	
Dimension HxWxD mm (body)	less than 252x180x80mm
Weight	<8.7kg
Colors	Light grey
RF Connectors	DIN 7/16 Female
Mounting Kit	Mounting kit for pole and wall included

ENVIRONMENTAL SPECIFICATIONS	
Temperature Range	-40°C to +65°C
Operational	ETS 300 019-1-4
Transportation	ETS 300 019-1-2
Storage	ETS 300 019-1-1
Lightning Protection	IEC61000-4-5
Housing	Aluminum
MTBF	>500,000 hours per TMA
Ingress Protection	IP67(Water jetting test)

APPROVAL AND TESTS	
Safety	EN 60950

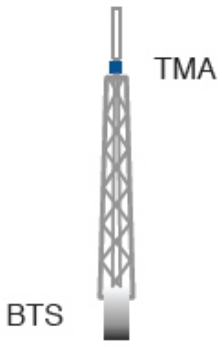

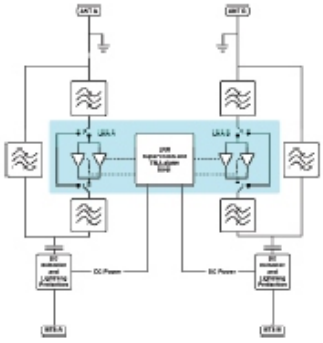

TY-T09D001(F1V1)

TMA Twin Dual duplex GSM900 Full Band 12 dB AISG

ELECTRICAL SPECIFICATIONS	
RX Frequency Range (MHz)	890 -915
RX Rejection	>71 dB
RX Gain(dB)	12±1
RX Return Loss	⩾18 dB
RX Noise Figure	1.8 dB, Typical
RX Output 3rd Order Intercept Point(dBm)	+25, Typical
RX Bypass Insertion Loss(dB)	2.8 dB max
RX Bypass Return Loss(dB)	⩾14 dB
RX Max Input Power (dBm)	+10 dBm
TX Frequency Range (MHz)	935-960
TX Return Loss	⩾18 dB
TX Insertion Loss (dB)	0.6 Typical,0.7 max
Intermodulation	<-110 dBm (@ 2x43 dBm Tx carriers,IM3 at 910MHz)
Input Voltage (V)	current window alarm mode: 10 -15 AISG1.1/AISG2.0 mode: 10-30
Alarm Functionality	current window alarm mode with 160-200 mA alarm current AISG1.1/AISG2.0 mode: 160-200mA
Power Consumption	@12 VDC, 1.5W per LNA
Power Handling, RMS	58.6 dBm

MECHANICAL SPECIFICATIONS

Dimension HxWxD mm (body)	252x180x74mm
Weight	<6.8 kg
Colors	Light grey
RF Connectors	DIN 7/16 Female
Mounting Kit	Mounting kit for pole and wall included

ENVIRONMENTAL SPECIFICATIONS

Temperature Range	-40°C to +65°C
Operational	ETS 300 019-1-4
Transportation	ETS 300 019-1-2
Storage	ETS 300 019-1-1
Lightning Protection	IEC61000-4-5
Housing	Aluminum
MTBF	>500,000 hours per TMA
Ingress Protection	IP66(Water jetting test)

APPROVAL AND TESTS

Safety	EN 60950

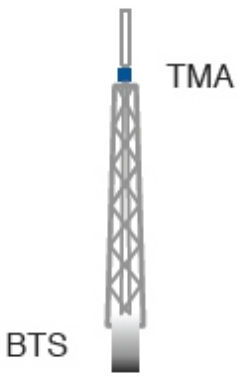

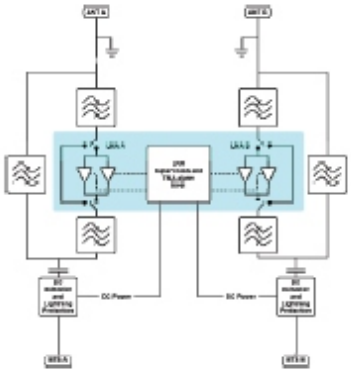

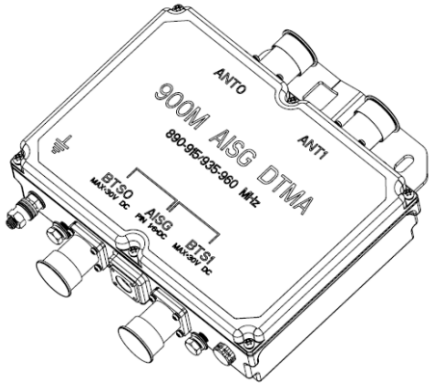

TY-T08D002(F1V1)

800&900MHz TMA Twin Dual duplex 12dB AISG

ELECTRICAL SPECIFICATIONS	
RX Frequency Range (MHz)	832-862MHz&880-915MHz
RX Rejection	>71 dB
RX Gain(dB)	12±1.5
RX Gain ripple	≤1.5dB
RX Return Loss	≥16 dB
RX Noise Figure	≤2.0dB
RX output 3rd order intercept point (dBm)	+24dBm Typical
RX Bypass Insertion Loss(dB)	≤3.3 dB
RX Bypass Return Loss(dB)	≥12 dB
TX Frequency Range (MHz)	791-821MHz&925-960MHz
TX Return Loss	≥18 dB
TX Insertion Loss (dB)	≤0.8dB
Intermodulation	<-110dBm (@ 2x43dBm)
Input Voltage (V)	current window alarm mode: 7 -15 AISG2.0 mode： 10-32
Power Handling(peak)	≥58.6 dBm

MECHANICAL SPECIFICATIONS	
Dimension HxWxD mm (body)	less than 360x315x135mm
Weight	<20kg
Colors	Light grey
RF Connectors	DIN 7/16 Female
Mounting Kit	Mounting kit for pole and wall included

ENVIRONMENTAL SPECIFICATIONS	
Temperature Range	-40°C to +65°C
Operational	ETS 300 019-1-4
Transportation	ETS 300 019-1-2
Storage	ETS 300 019-1-1
Lightning Protection	IEC61000-4-5
Housing	Aluminum
MTBF	>500,000 hours per TMA
Ingress Protection	IP66(Water jetting test)

APPROVAL AND TESTS	
Safety	EN 60950

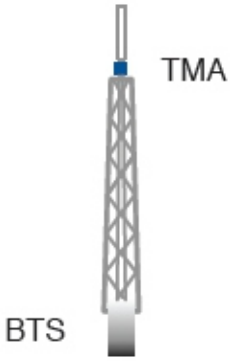

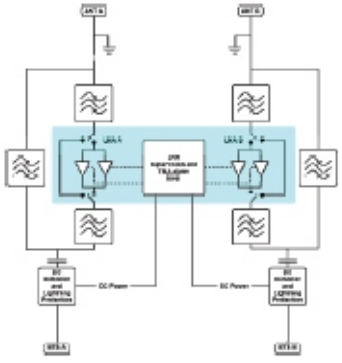

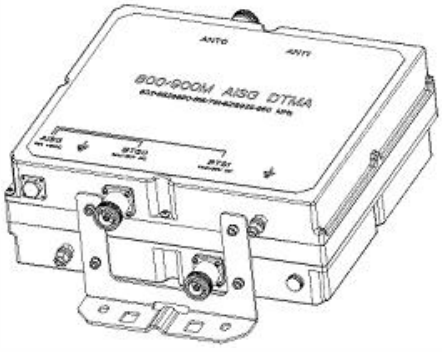

TY-T09D002(F1V1)

900MHz TMA Twin Dual duplex 32dB AISG

ELECTRICAL SPECIFICATIONS	
RX Frequency Range (MHz)	880 -915
RX Rejection	>71 dB
RX Gain(dB)	32±1.5
RX Gain ripple	≤1.0dB
RX Return Loss	≥16 dB
RX Noise Figure	≤2.2dB
RX output 3rd order intercept point (dBm)	+37.2dBm Typical
RX Bypass Insertion Loss(dB)	≤4.0 dB
RX Bypass Return Loss(dB)	≥12 dB
TX Frequency Range (MHz)	925-960
TX Return Loss	≥18 dB
TX Insertion Loss (dB)	≤0.8dB
Intermodulation	<-110dBm (@ 2x43dBm)
Input Voltage (V)	current window alarm mode: 7 -15 AISG2.0 mode： 10-32
Power Handling(peak)	≥58.6 dBm

MECHANICAL SPECIFICATIONS	
Dimension HxWxD mm (body)	less than343x300x80mm
Weight	<11kg
Colors	Light grey
RF Connectors	DIN 7/16 Female
Mounting Kit	Mounting kit for pole and wall included

ENVIRONMENTAL SPECIFICATIONS	
Temperature Range	-40°C to +65°C
Operational	ETS 300 019-1-4
Transportation	ETS 300 019-1-2
Storage	ETS 300 019-1-1
Lightning Protection	IEC61000-4-5
Housing	Aluminum
MTBF	>500,000 hours per TMA
Ingress Protection	IP67(Water jetting test)

APPROVAL AND TESTS	
Safety	EN 60950

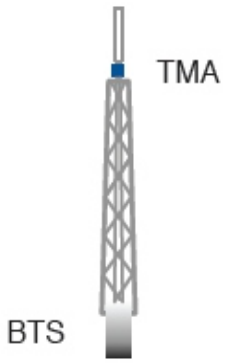

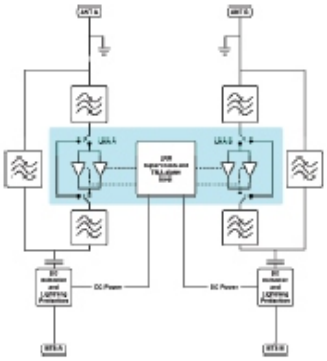

Single Unit Combiner

Single Unit Combiner	
TY-DBC0012(F1Vx)	35-36
TY-DBC0012(F4Vx)	37-38
TY-DBC1821	39-40
TY-TBC091821	41-42
TY-C002S001(F1V2)	43-44
TY-C002S004(F1V1)	45-46
TY-C022S001(F1V2)	47-48
TY-C022S002(F1V2)	49-50
TY-C022S003(F1V2)	51-52
TY-C122S001(F1V2)	53-54
TY-C122S002(F1V2)	55-56
TY-C122S003(F1V2)	57-58
TY-C222S001(F1V1)	59-60
TY-C023S001(F1V2)	61-62
TY-C023S002(F1V2)	63-64
TY-C023S004(F1Vx)	65-66
TY-C123S002(F1V2)	67-68
TY-C024S001(F1V2)	69-70

TY-DBC0012F1Vx

GSM850/GSM900/GSM1800/UMTS2100 Outdoor/ Indoor Dual band combiner

ELECTRICAL SPECIFICATIONS	
1800 port Frequency Range (MHz)	806 - 960
Insertion Loss (dB)	0.10 Typical,0.20 max
Return Loss	⩾20.8 dB
Isolation(1710-2170MHz)	⩾57 dB
Intermodulation	<-155 dBc (@ 2x43 dBm Tx carriers,IM3 at 910MHz)
2100 port Frequency Range (MHz)	1710 - 2170
TX Insertion Loss (dB)	0.25 Typical,0.3 max
TX Return Loss	⩾20.8 dB
Isolation(806-960MHz)	⩾46 dB
Intermodulation	<-155 dBc (@ 2x43 dBm Tx carriers,IM3 at 1730MHz)
Peek Power	⩾58.6 dBm
DC Current,(Max)	2.5A

MECHANICAL SPECIFICATIONS	
Dimension HxWxD mm (body)	217x127x65mm
Weight	<3.6kg
Colors	Light grey
RF Connectors	DIN 7/16 Female
Mounting Kit	Mounting kit for pole and wall included

ENVIRONMENTAL SPECIFICATIONS

Temperature Range	-40°C to +65°C
Operational	ETS 300 019-1-4
Transportation	ETS 300 019-1-2
Storage	ETS 300 019-1-1
Lightning Protection	IEC61000-4-5
Housing	Aluminum
MTBF	>500,000 hours per TMA
Ingress Protection	IP66(Water jetting test)

APPROVAL AND TESTS

Safety	EN 60950

Part Number	Product Type	DC Configuration			
		Full DC pass	DC pass in low frequency band	DC pass in high frequency band	No DC pass
TY-DBC0012F1V1	Single Wall/Pole Mounting Bracket Kit		√		
TY-DBC0012F1V2	Single Wall/Pole Mounting Bracket Kit			√	
TY-DBC0012F1V3	Single Wall/Pole Mounting Bracket Kit				√
TY-DBC0012F1V4	Single Wall/Pole Mounting Bracket Kit	√			

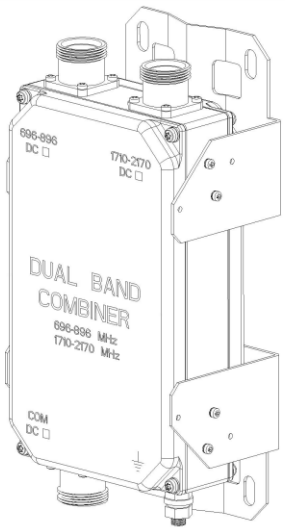

TY-DBC0012F4Vx

700MHz/CDMA800/GSM900/GSM1800/ PCS1900/UMTS2100 Outdoor/ Indoor Dual band combiner

ELECTRICAL SPECIFICATIONS	
696 - 960 port Frequency Range (MHz)	696 - 960
Insertion Loss (dB)	0.10 Typical,0.20 max
Return Loss	⩾20.8 dB
Isolation(1710-2170MHz)	⩾57 dB
Intermodulation (Normal test CDMA800)	<-155 dBc (@ 2x43 dBm Tx carriers,IM3 at 844MHz)
1710 - 2170 port Frequency Range (MHz)	1710 - 2170
TX Insertion Loss (dB)	0.25 Typical,0.3 max
TX Return Loss	⩾20.8 dB
Isolation(696-960MHz)	⩾46 dB
Intermodulation (Normal test PCS1900)	<-155 dBc (@ 2x43 dBm Tx carriers,IM3 at 1870MHz)
Peek Power	⩾58.6 dBm
DC Current,(Max)	2.5A

MECHANICAL SPECIFICATIONS	
Dimension HxWxD mm (body)	217x127x65mm
Weight	<3.6kg
Colors	Light grey
RF Connectors	DIN 7/16 Female
Mounting Kit	Mounting kit for pole and wall included

ENVIRONMENTAL SPECIFICATIONS

Temperature Range	-40°C to +65°C
Operational	ETS 300 019-1-4
Transportation	ETS 300 019-1-2
Storage	ETS 300 019-1-1
Lightning Protection	IEC61000-4-5
Housing	Aluminum
MTBF	>500,000 hours per TMA
Ingress Protection	IP66(Water jetting test)

APPROVAL AND TESTS

Safety	EN 60950

Part Number	Product Type	DC Configuration			
		Full DC pass	DC pass in low frequency band	DC pass in high frequency band	No DC pass
TY-DBC0012F4V1	Double Wall/Pole Mounting Bracket Kit		√		
TY-DBC0012F4V2	Double Wall/Pole Mounting Bracket Kit			√	
TY-DBC0012F4V3	Double Wall/Pole Mounting Bracket Kit				√
TY-DBC0012F4V4	Double Wall/Pole Mounting Bracket Kit	√			

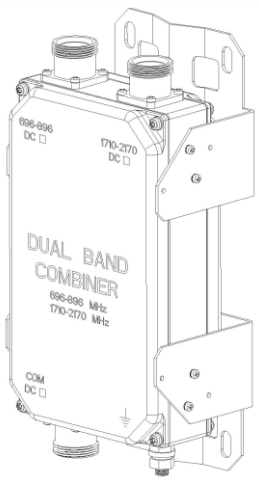

TY-DBC1821-XX

GSM1800/UMTS2100 Outdoor/Indoor Dual band combiner

ELECTRICAL SPECIFICATIONS	
1800 port Frequency Range (MHz)	1710 -1880
Insertion Loss (dB)	0.25 Typical,0.3 max
Return Loss	⩾20.8 dB
Isolation(1920-2170MHz)	⩾40 dB
Intermodulation	<-155 dBc (@ 2x43 dBm Tx carriers,IM3 at 1730MHz)
2100 port Frequency Range (MHz)	1920-2170
TX Insertion Loss (dB)	0.25 Typical,0.3 max
TX Return Loss	⩾20.8 dB
Isolation(1710-1880MHz)	⩾40 dB
Intermodulation	<-155 dBc (@ 2x43 dBm Tx carriers,IM7 at 1930MHz)
Peek Power	⩾58.6 dBm
DC Current,(Max)	2.5A

MECHANICAL SPECIFICATIONS	
Dimension HxWxD mm (body)	217x127x52mm
Weight	<3.4kg
Colors	Light grey
RF Connectors	DIN 7/16 Female
Mounting Kit	Mounting kit for pole and wall included

ENVIRONMENTAL SPECIFICATIONS

Temperature Range	-40°C to +65°C
Operational	ETS 300 019-1-4
Transportation	ETS 300 019-1-2
Storage	ETS 300 019-1-1
Lightning Protection	IEC61000-4-5
Housing	Aluminum
MTBF	>500,000 hours per TMA
Ingress Protection	IP66(Water jetting test)

APPROVAL AND TESTS

Safety	EN 60950

Part Number	Product Type	DC Configuration	
		DC pass in 1710~1880 MHz band	DC pass in 1920~2170 MHz band
TY-DBC1821	Double Wall/Pole Mounting Bracket Kit		
TY-DBC1821-1821	Double Wall/Pole Mounting Bracket Kit	✓	✓
TY-DBC1821-21	Double Wall/Pole Mounting Bracket Kit		✓
TY-DBC1821-18	Double Wall/Pole Mounting Bracket Kit	✓	

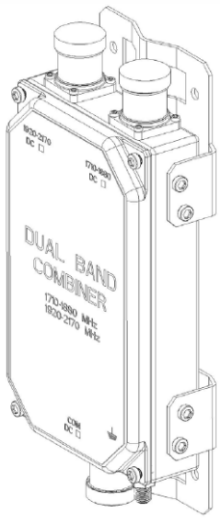

TY-TBC091821-XX

GSM900/GSM1800/UMTS2100 Indoor/Outdoor Crossband Triplexer

ELECTRICAL SPECIFICATIONS	
900 port Frequency Range (MHz)	806 -960
Insertion Loss (dB)	0.25 Typical,0.3 max
Return Loss	⩾20.8 dB
Isolation(1710-2170MHz)	⩾40 dB
Intermodulation	<-155 dBc (@ 2x43 dBm Tx carriers,IM3 at 910MHz)
1800 port Frequency Range (MHz)	1710 -1880
TX Insertion Loss (dB)	0.25 Typical,0.3 max
TX Return Loss	⩾20.8 dB
Isolation(1920-2170MHz)	⩾40 dB
Intermodulation	<-155 dBc (@ 2x43 dBm Tx carriers,IM3 at 1730MHz)
2100 port Frequency Range (MHz)	1920-2170
TX Insertion Loss (dB)	0.25 Typical,0.3 max
TX Return Loss	⩾20.8 dB
Isolation(1920-2170MHz)	⩾40 dB
Intermodulation	<-155 dBc (@ 2x43 dBm Tx carriers,IM7 at 1930MHz)
Peek Power	⩾58.6 dBm
DC Current,(Max)	2.5A

MECHANICAL SPECIFICATIONS	
Dimension HxWxD mm (body)	236x168x52.5mm
Weight	<4.4kg
Colors	Light grey
RF Connectors	DIN 7/16 Female
Mounting Kit	Mounting kit for pole and wall included

ENVIRONMENTAL SPECIFICATIONS

Temperature Range	-40°C to +65°C
Operational	ETS 300 019-1-4
Transportation	ETS 300 019-1-2
Storage	ETS 300 019-1-1
Lightning Protection	IEC61000-4-5
Housing	Aluminum
MTBF	>500,000 hours per TMA
Ingress Protection	IP66(Water jetting test)

APPROVAL AND TESTS

Safety	EN 60950

Part Number	DC Configuration		
	DC pass In 800~960 MHz band	DC pass in 1710~1880 MHz band	DC pass in 1920~2170 MHz band
TY-TBC091821-1821		✓	✓
TY-TBC091821-21			✓
TY-TBC091821-18		✓	
TY-TBC091821-09	✓		
TY-TBC091821-0918	✓	✓	
TY-TBC091821-0921	✓		✓
TY-TBC091821-O			

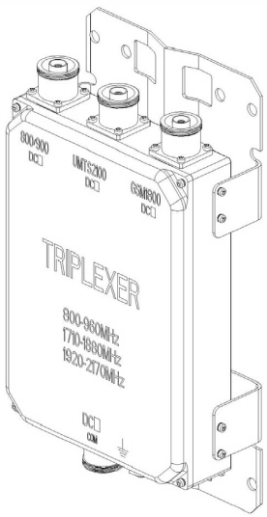

TY-C002S001(F1V2)

DD800/GSM900 Outdoor/Indoor Dual band combiner

ELECTRICAL SPECIFICATIONS	
DD800 port Frequency Range (MHz)	790-862
Insertion Loss (dB)	0.35 Typical,0.4 max
Return Loss	⩾18 dB
Isolation(880-960MHz)	⩾50 dB
Intermodulation	<-155dBc (@ 2x43 dBm Tx carriers,IM3 at 851MHz)
GSM900 port Frequency Range (MHz)	880-960
Insertion Loss (dB)	0.35 Typical,0.4 max
Return Loss	⩾18dB
Isolation(790-862MHz)	⩾50 dB
Intermodulation	<-155dBc (@ 2x43 dBm Tx carriers,IM3 at 910MHz)
Peek Power	⩾58.6 dBm
DC Current,(Max)	2.5A

MECHANICAL SPECIFICATIONS	
Dimension HxWxD mm (body)	210x180x52mm(filter body)
Weight	⩽5 kg(net weight)
Colors	Light grey
RF Connectors	DIN 7/16 Female
Mounting Kit	Mounting kit for pole and wall included

ENVIRONMENTAL SPECIFICATIONS	
Temperature Range	-40°C to +65°C
Operational	ETS 300 019-1-4
Transportation	ETS 300 019-1-2
Storage	ETS 300 019-1-1
Lightning Protection	IEC61000-4-5
Housing	Aluminum
MTBF	>500,000 hours
Ingress Protection	IP67(Water jetting test)

APPROVAL AND TESTS	
Safety	EN 60950

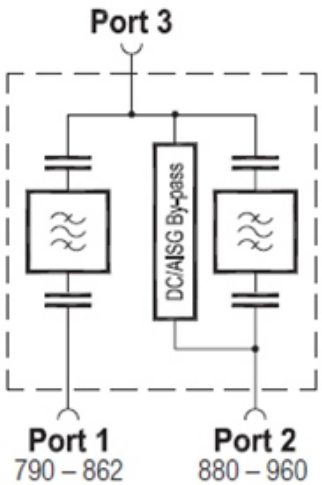

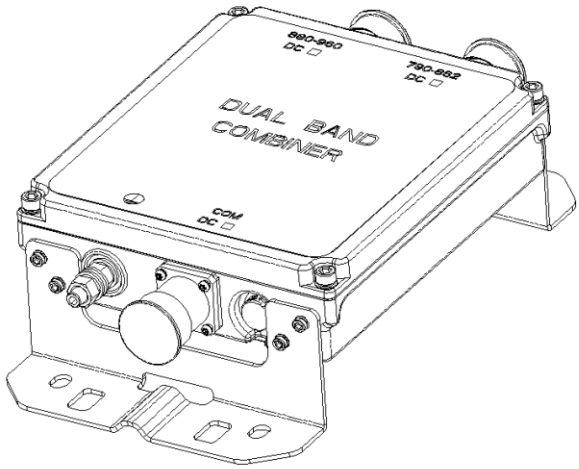

TY-C002S004(F1V1)

900M Same Band Combiner

ELECTRICAL SPECIFICATIONS	
RX Frequency Range(MHz)	880 -915
RX Return Loss	≥18 dB
Insertion Loss (Port1←→Port3/ Port4←→Port6)	≤4.3dB
Insertion Loss (Port2←→Port3/ Port5←→Port6)	≤4.0dB
Isolation(Port1←→Port2/ Port4←→Port5)	≥45dB@925-960MHz
TX Frequency Range(MHz)	925-960
TX Return Loss	≥18 dB
TX Insertion Loss	≤0.4dB
Isolation(Port1←→Port2/ Port4←→Port5)	≥25dB@880-915MHz
Intermodulation	≤-110 dBm(with 2×43dBm)
Power Handing	≥58.6 dBm

MECHANICAL SPECIFICATIONS	
Dimension HxWxD mm (body)	280x280x72mm
Weight	<8 kg
Colors	Light grey
RF Connectors	DIN 7/16 Female
Mounting Kit	Mounting kit for pole and wall included

ENVIRONMENTAL SPECIFICATIONS	
Temperature Range	-40°C to +60°C
Operational	ETS 300 019-1-4
Transportation	ETS 300 019-1-2
Storage	ETS 300 019-1-1
Lightning Protection	IEC61000-4-5
Housing	Aluminum
MTBF	>100,000 hours
Ingress Protection	IP67(Water jetting test)

APPROVAL AND TESTS	
Safety	EN 60950

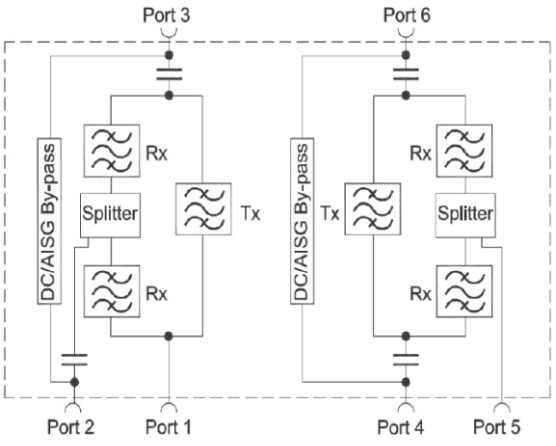

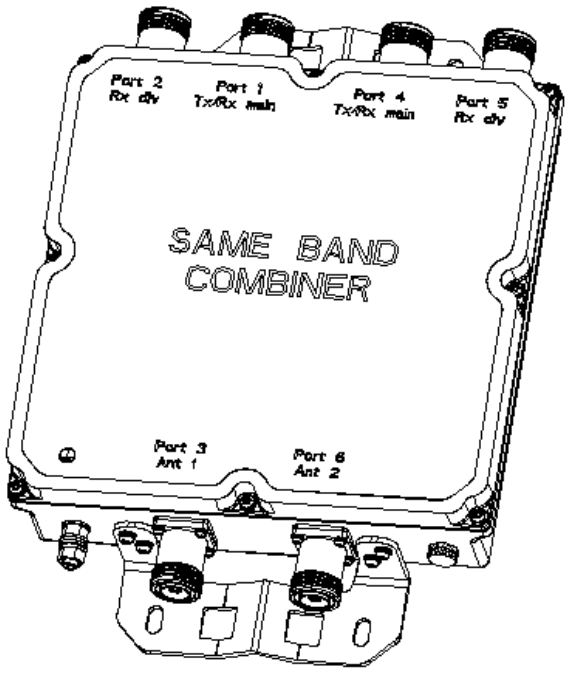

TY-C022S001(F1V2)

698-960/1710-2700 Outdoor/Indoor Dual band combiner

ELECTRICAL SPECIFICATIONS	
Port1-Port3 Frequency Range (MHz)	698-960
Insertion Loss (dB)	0.25 Typical,0.3 max
Return Loss	⩾18 dB
Isolation(1710-2700MHz)	⩾40 dB
Intermodulation	<-155dBc (3rd order, with 2x43 dBm)
Port2-Port3 Frequency Range (MHz)	1710-2700
Insertion Loss (dB)	0.3 Typical,0.4 max@1710-2000MHz 0.35 Typical,0.4 max@2000-2700MHz
Return Loss	⩾18 dB
Isolation(698-960MHz)	⩾40 dB
Intermodulation	<-155dBc (3rd order, with 2x43 dBm)
Peek Power	⩾58.6 dBm
DC Current,(Max)	2.5A

MECHANICAL SPECIFICATIONS	
Dimension HxWxD mm (body)	145x140x50mm (filter body)
Weight	⩽4kg(net weight)
Colors	Light grey
RF Connectors	DIN 7/16 Female
Mounting Kit	Mounting kit for pole and wall included

ENVIRONMENTAL SPECIFICATIONS	
Temperature Range	-40°C to +65°C
Operational	ETS 300 019-1-4
Transportation	ETS 300 019-1-2
Storage	ETS 300 019-1-1
Lightning Protection	IEC61000-4-5
Housing	Aluminum
MTBF	>500,000 hours
Ingress Protection	IP67(Water jetting test)

APPROVAL AND TESTS	
Safety	EN 60950

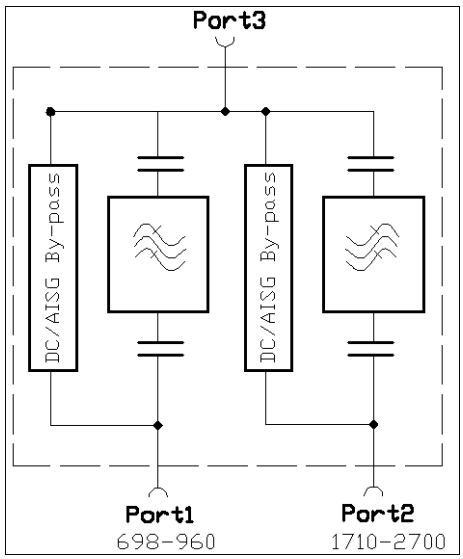

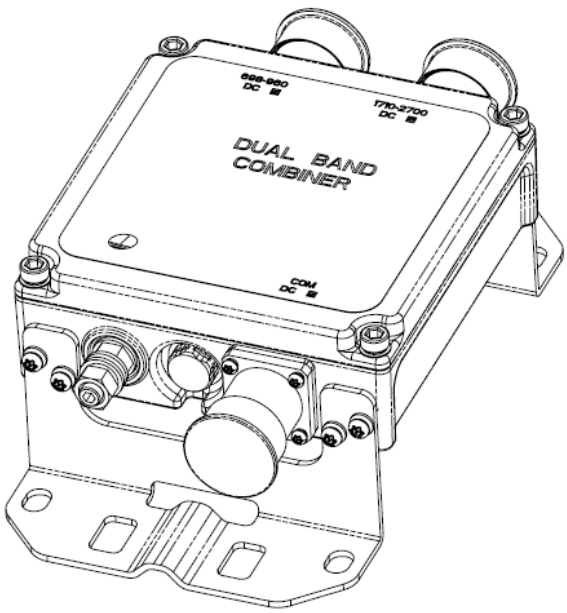

TY-C022S002(F1V2)

900/1800/2100 Outdoor/Indoor Dual band combiner

ELECTRICAL SPECIFICATIONS	
Port1 Frequency Range (MHz)	790-960/1710-1880
Insertion Loss (dB)	0.25 Typical,0.35 max @790-960MHz 0.3 Typical,0.4 max @1710-1880MHz
Return Loss	⩾18 dB
Isolation(1920-2200MHz)	⩾45 dB
Intermodulation	<-160dBc (@ 2x43 dBm Tx carriers,IM3)
Port2 Frequency Range (MHz)	1920-2200
Insertion Loss (dB)	0.3 Typical,0.4 max
Return Loss	⩾18 dB
Isolation(790-960/1710-1880MHz)	⩾45 dB
Intermodulation	<-160dBc (@ 2x43 dBm Tx carriers,IM3 at 2050MHz)
Peek Power	⩾58.6 dBm
DC Current,(Max)	2.5A

MECHANICAL SPECIFICATIONS	
Dimension HxWxD mm (body)	190x154x51 (filter body)
Weight	⩽5kg(net weight)
Colors	Light grey
RF Connectors	DIN 7/16 Female
Mounting Kit	Mounting kit for pole and wall included

ENVIRONMENTAL SPECIFICATIONS	
Temperature Range	-40°C to +65°C
Operational	ETS 300 019-1-4
Transportation	ETS 300 019-1-2
Storage	ETS 300 019-1-1
Lightning Protection	IEC61000-4-5
Housing	Aluminum
MTBF	>500,000 hours
Ingress Protection	IP67(Water jetting test)

APPROVAL AND TESTS	
Safety	EN 60950

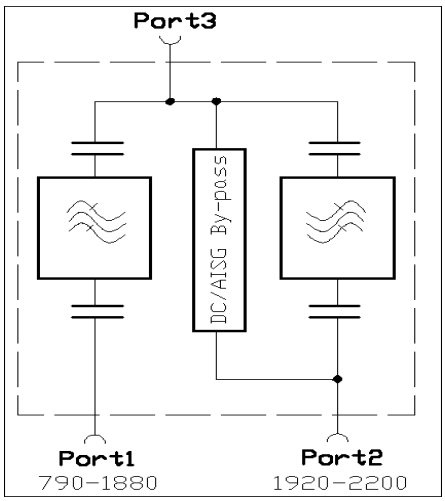

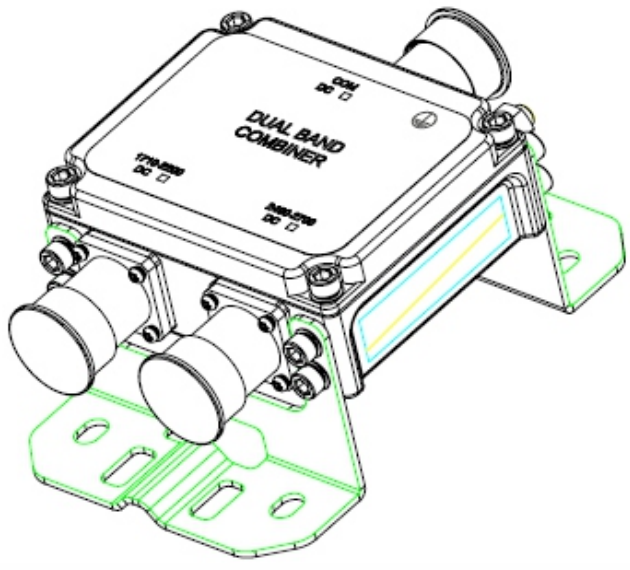

TY-C022S003(F1V2)

698-960/1710-2700 Outdoor/Indoor Dual band combiner

ELECTRICAL SPECIFICATIONS	
Port1-Port3 Frequency Range (MHz)	698-960
Insertion Loss (dB)	0.25 Typical,0.3 max
Return Loss	⩾18 dB
Isolation(1710-2700MHz)	⩾40 dB
Intermodulation	<-155dBc (3rd order, with 2x43 dBm)
Port2-Port3 Frequency Range (MHz)	1710-2700MHz
Insertion Loss (dB)	0.3 Typical,0.4 max@1710-2000MHz 0.35 Typical,0.4 max@2000-2700MHz
Return Loss	⩾18 dB
Isolation(698-960MHz)	⩾40 dB
Intermodulation	<-155dBc (3rd order, with 2x43 dBm)
Peek Power	⩾58.6 dBm
DC Current,(Max)	2.5A

MECHANICAL SPECIFICATIONS	
Dimension HxWxD mm (body)	145x140x50mm (filter body)
Weight	⩽4kg(net weight)
Colors	Light grey
RF Connectors	DIN 7/16 Female
Mounting Kit	Mounting kit for pole and wall included

ENVIRONMENTAL SPECIFICATIONS	
Temperature Range	-40°C to +65°C
Operational	ETS 300 019-1-4
Transportation	ETS 300 019-1-2
Storage	ETS 300 019-1-1
Lightning Protection	IEC61000-4-5
Housing	Aluminum
MTBF	>500,000 hours
Ingress Protection	IP67(Water jetting test)

APPROVAL AND TESTS	
Safety	EN 60950

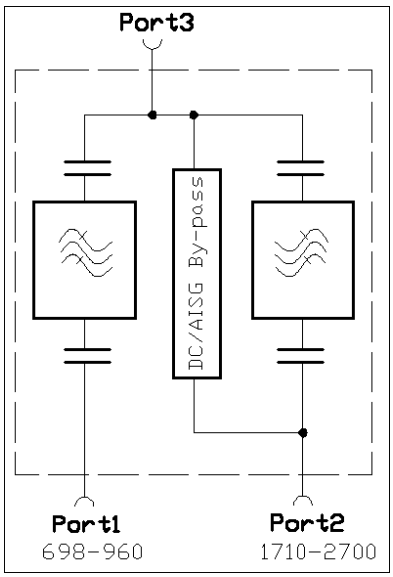

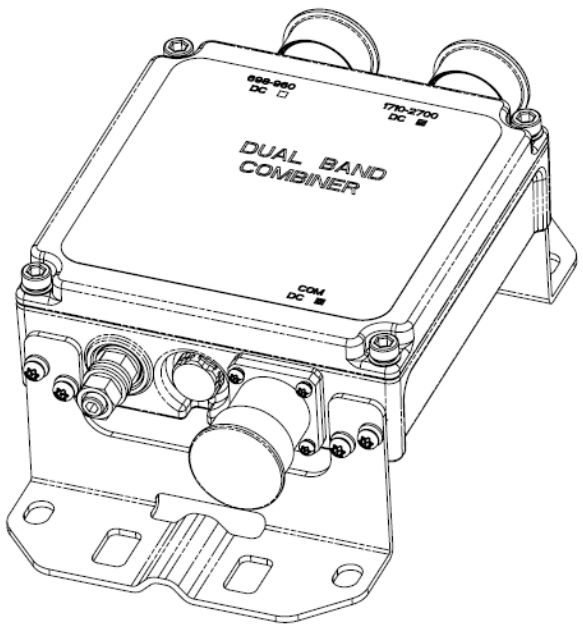

TY-C122S001(F1V2)

GSM1800/UMTS2100/LTE2600 Outdoor/Indoor Dual band combiner

ELECTRICAL SPECIFICATIONS	
1800/2100 port Frequency Range (MHz)	1710-2200
Insertion Loss (dB)	0.25 Typical,0.35 max
Return Loss	⩾18 dB
Isolation(2490-2700MHz)	⩾45 dB
Intermodulation	<-155dBc (@ 2x43 dBm Tx carriers,IM3 at 2050MHz)
2600 port Frequency Range (MHz)	2490-2700
Insertion Loss (dB)	0.25 Typical,0.35 max
Return Loss	⩾18 dB
Isolation(1710-2200MHz)	⩾45 dB
Intermodulation	<-155dBc (@ 2x43 dBm Tx carriers,IM3 at 2550MHz)
Peek Power	58.6 dBm
DC Current,(Max)	2.5A

MECHANICAL SPECIFICATIONS	
Dimension HxWxD mm (body)	126x 102 x 50 mm (filter body)
Weight	⩽3kg (net weight)
Colors	Light grey
RF Connectors	DIN 7/16 Female
Mounting Kit	Mounting kit for pole and wall included

ENVIRONMENTAL SPECIFICATIONS	
Temperature Range	-40°C to +65°C
Operational	ETS 300 019-1-4
Transportation	ETS 300 019-1-2
Storage	ETS 300 019-1-1
Lightning Protection	IEC61000-4-5
Housing	Aluminum
MTBF	>500,000 hours
Ingress Protection	IP67(Water jetting test)

APPROVAL AND TESTS	
Safety	EN 60950

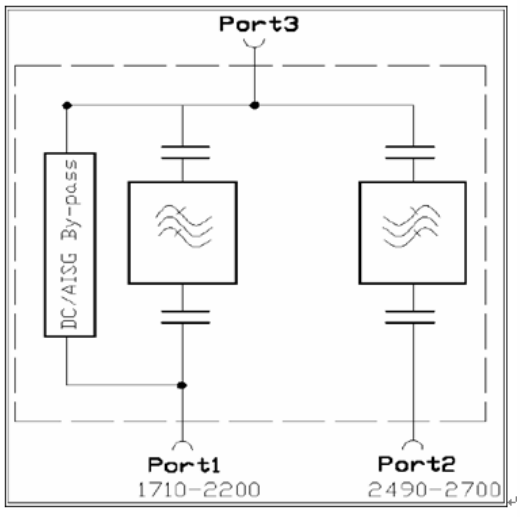

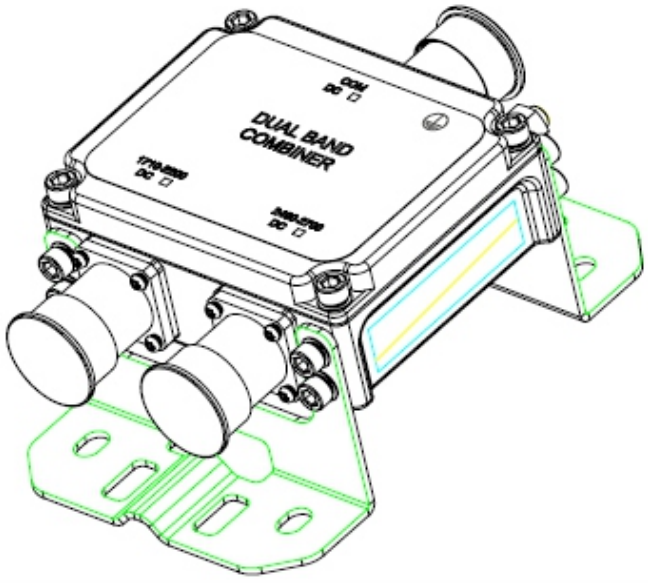

TY-C122S002(F1V2)

GSM1800/UMTS2100 Outdoor/Indoor Dual band combiner

ELECTRICAL SPECIFICATIONS	
1800 port Frequency Range (MHz)	1710 - 1880
Insertion Loss (dB)	0.35 Typical,0.4 max
Return Loss	⩾18 dB
Isolation(1920-2200MHz)	⩾40 dB
Intermodulation	<-155dBc (@ 2x43 dBm Tx carriers,IM3 at 1730MHz)
2100 port Frequency Range (MHz)	1920 - 2200
TX Insertion Loss (dB)	0.35 Typical,0.4 max
TX Return Loss	⩾18 dB
Isolation(1710-1880MHz)	⩾40 dB
Intermodulation	<-155 dBc (@ 2x43 dBm Tx carriers,IM7 at 1930MHz)
Peek Power	⩾58.6 dBm
DC Current,(Max)	2.5A

MECHANICAL SPECIFICATIONS	
Dimension HxWxD mm (body)	138x130x50mm (filter body)
Weight	⩽5kg(net weight)
Colors	Light grey
RF Connectors	DIN 7/16 Female
Mounting Kit	Mounting kit for pole and wall included

ENVIRONMENTAL SPECIFICATIONS	
Temperature Range	-40°C to +65°C
Operational	ETS 300 019-1-4
Transportation	ETS 300 019-1-2
Storage	ETS 300 019-1-1
Lightning Protection	IEC61000-4-5
Housing	Aluminum
MTBF	>500,000 hours
Ingress Protection	IP67(Water jetting test)

APPROVAL AND TESTS	
Safety	EN 60950

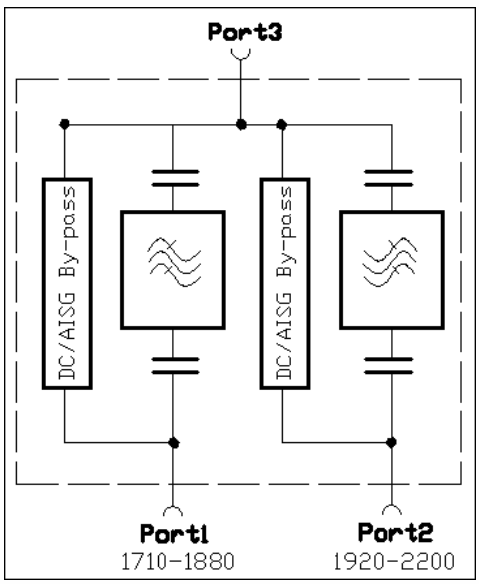

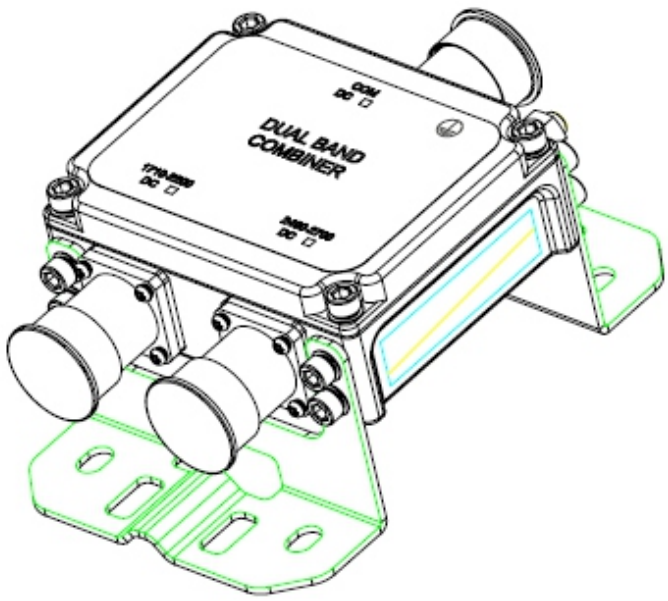

TY-C122S003(F1V2)

GSM1800/UMTS2100 Outdoor/Indoor Dual band combiner

ELECTRICAL SPECIFICATIONS	
1800 port Frequency Range (MHz)	1710 - 1880
Insertion Loss (dB)	0.35 Typical,0.4 max
Return Loss	⩾18 dB
Isolation(1920-2200MHz)	⩾40 dB
Intermodulation	<-155dBc (@ 2x43 dBm Tx carriers,IM3 at 1730MHz)
2100 port Frequency Range (MHz)	1920 - 2200
TX Insertion Loss (dB)	0.35 Typical,0.4 max
TX Return Loss	⩾18 dB
Isolation(1710-1880MHz)	⩾40 dB
Intermodulation	<-155 dBc (@ 2x43 dBm Tx carriers,IM7 at 1930MHz)
Peek Power	⩾58.6 dBm
DC Current,(Max)	2.5A

MECHANICAL SPECIFICATIONS	
Dimension HxWxD mm (body)	138x130x50mm (filter body)
Weight	⩽5kg(net weight)
Colors	Light grey
RF Connectors	DIN 7/16 Female
Mounting Kit	Mounting kit for pole and wall included

ENVIRONMENTAL SPECIFICATIONS	
Temperature Range	-40°C to +65°C
Operational	ETS 300 019-1-4
Transportation	ETS 300 019-1-2
Storage	ETS 300 019-1-1
Lightning Protection	IEC61000-4-5
Housing	Aluminum
MTBF	>500,000 hours
Ingress Protection	IP67(Water jetting test)

APPROVAL AND TESTS	
Safety	EN 60950

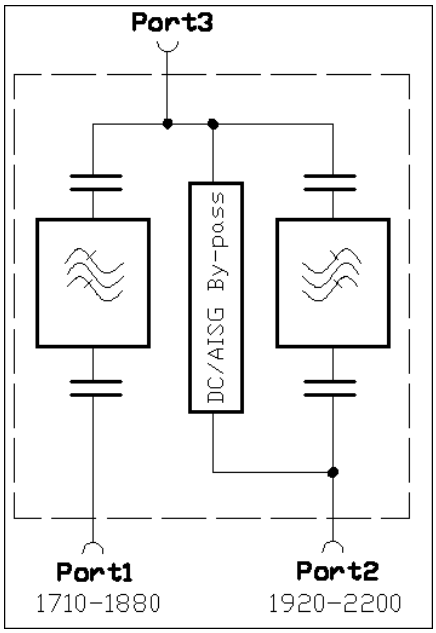

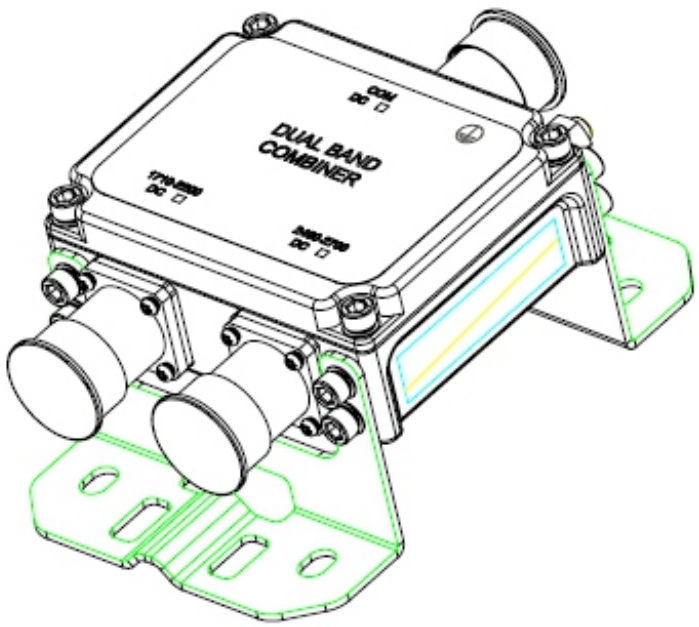

TY-C222S001(F1V1)

WiMAX/LTE TDD 8:4 Diplexer combiner

ELECTRICAL SPECIFICATIONS	
LTE port Frequency Range (MHz)	2582 - 2602
Insertion Loss (dB)	0.9 Typical,1.0 max
Return Loss	⩾20 dB
Isolation(2614-2624MHz)	⩾30 dB
Intermodulation	<-140 dBc (@ 2x43 dBm Tx carriers,IM3 at 2622MHz)
WiMAX port Frequency Range (MHz)	2614 - 2624
TX Insertion Loss (dB)	0.9 Typical,1.0max
TX Return Loss	⩾20 dB
Isolation(2582-2602MHz)	⩾30dB
Intermodulation	<-140 dBc (@ 2x43 dBm Tx carriers,IM3 at 2604MHz)
Peek Power	57 dBm

MECHANICAL SPECIFICATIONS	
Dimension HxWxD mm (body)	305x92x98mm(filter body) / 706x406x200mm (Package Dimension，three filters)
Weight	<7kg(net weight) / <22kg(gross weight)
Colors	Light grey
RF Connectors	N Female
Mounting Kit	Mounting kit for pole and wall included

ENVIRONMENTAL SPECIFICATIONS	
Temperature Range	-40°C to +80°C
Operational	ETS 300 019-1-4
Transportation	ETS 300 019-1-2
Storage	ETS 300 019-1-1
Lightning Protection	IEC61000-4-5
Housing	Aluminum
MTBF	>500,000 hours
Ingress Protection	IP66(Water jetting test)

APPROVAL AND TESTS	
Safety	EN 60950

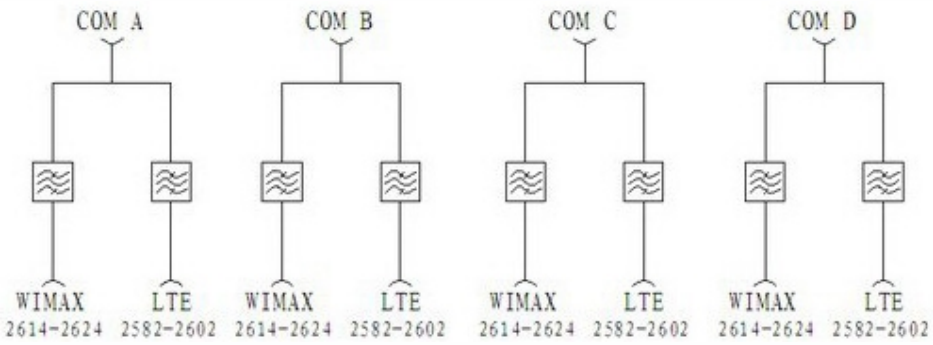

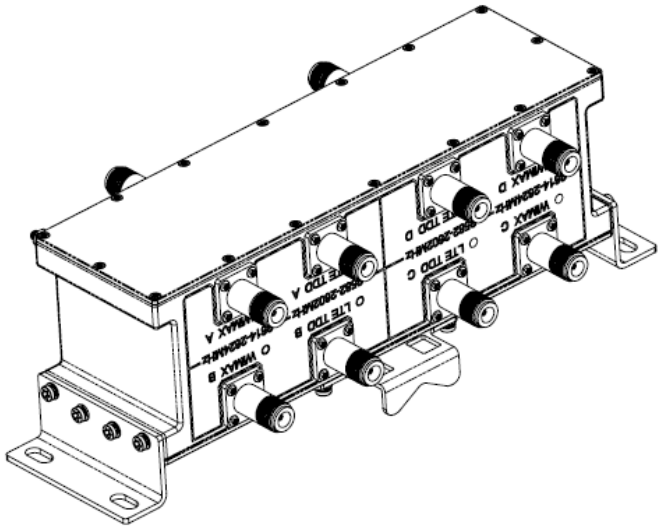

TY-C023S001(F1V2)

900/1800/2100 Outdoor/Indoor Triple band combiner

ELECTRICAL SPECIFICATIONS	
900 port Frequency Range (MHz)	790-960
Insertion Loss (dB)	0.25 Typical,0.3 max
Return Loss	⩾18 dB
Isolation(1710-2200MHz)	⩾40 dB
Intermodulation	<-155 dBc (@ 2x43 dBm Tx carriers,IM3 at 910MHz)
1800 port Frequency Range (MHz)	1710 -1880
Insertion Loss (dB)	0.35 Typical,0.4 max
Return Loss	⩾18dB
Isolation(790-960/1920-2200MHz)	⩾40 dB
Intermodulation	<-155 dBc (@ 2x43 dBm Tx carriers,IM3 at 1730MHz)
2100 port Frequency Range (MHz)	1920-2200
Insertion Loss (dB)	0.35 Typical,0.4 max
Return Loss	⩾18dB
Isolation(790-960/1710-1880MHz)	⩾40 dB
Intermodulation	<-155 dBc (@ 2x43 dBm Tx carriers,IM7 at 1930MHz)
Peek Power	⩾58.6 dBm
DC Current,(Max)	2.5A

MECHANICAL SPECIFICATIONS	
Dimension HxWxD mm (body)	141 x 168 x 50 mm(filter body)
Weight	⩽5 kg(net weight)
Colors	Light grey
RF Connectors	DIN 7/16 Female
Mounting Kit	Mounting kit for pole and wall included

ENVIRONMENTAL SPECIFICATIONS	
Temperature Range	-40°C to +65°C
Operational	ETS 300 019-1-4
Transportation	ETS 300 019-1-2
Storage	ETS 300 019-1-1
Lightning Protection	IEC61000-4-5
Housing	Aluminum
MTBF	>500,000 hours per TMA
Ingress Protection	IP67(Water jetting test)

APPROVAL AND TESTS	
Safety	EN 60950

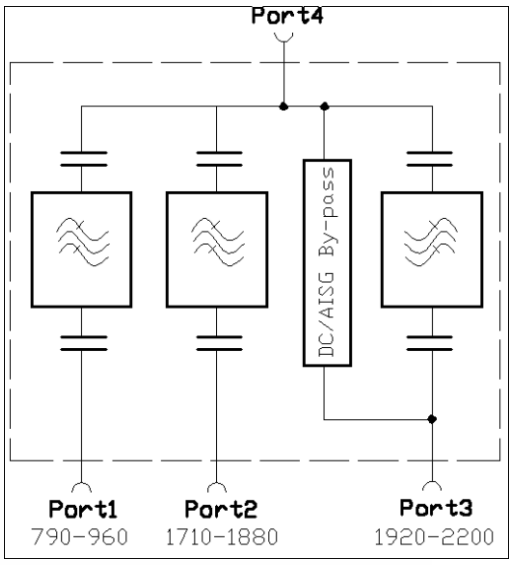

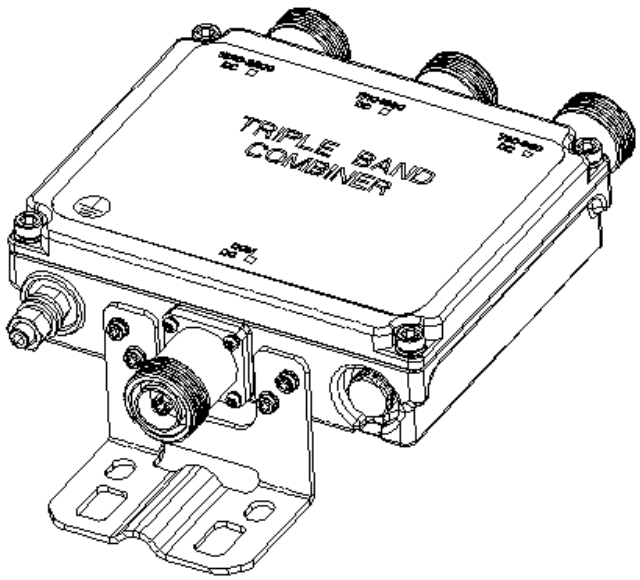

TY-C023S002(F1V2)

900-1800/2100/2600 Outdoor/Indoor Triple band combiner

ELECTRICAL SPECIFICATIONS	
900&1800 port Frequency Range (MHz)	790-960 / 1710-1880
Insertion Loss (dB)	790-960MHz 0.25 Typical,0.35 max / 1710-1880 MHz 0.35Typical,0.4 max
Return Loss	⩾18 dB
Isolation(1710-2200/2490-2700MHz)	⩾45 dB
Intermodulation	<-155dBc (3rd order, with 2 x43 dBm)
2100 port Frequency Range (MHz)	1920-2200
Insertion Loss (dB)	0.35 Typical,0.4 max
Return Loss	⩾18 dB
Isolation (790-960/1710-1880/2490-2700MHz)	⩾45 dB
Intermodulation	<-155dBc (7rd order, with 2 x43 dBm)
2600 port Frequency Range (MHz)	2490-2700
Insertion Loss (dB)	0.25 Typical,0.35 max
Return Loss	⩾18dB
Isolation(790-960/1710-2200MHz)	⩾45 dB
Intermodulation	<-155dBc (3rd order, with 2 x43 dBm)
Peek Power	58.6 dBm
DC Current,(Max)	2.5A

MECHANICAL SPECIFICATIONS	
Dimension HxWxD mm (body)	215x200x51mm (filter body)
Weight	<4kg (net weight)
Colors	Light grey
RF Connectors	DIN 7/16 Female
Mounting Kit	Mounting kit for pole and wall included

ENVIRONMENTAL SPECIFICATIONS	
Temperature Range	-40°C to +65°C
Operational	ETS 300 019-1-4
Transportation	ETS 300 019-1-2
Storage	ETS 300 019-1-1
Lightning Protection	IEC61000-4-5
Housing	Aluminum
MTBF	>500,000 hours
Ingress Protection	IP67(Water jetting test)

APPROVAL AND TESTS	
Safety	EN 60950

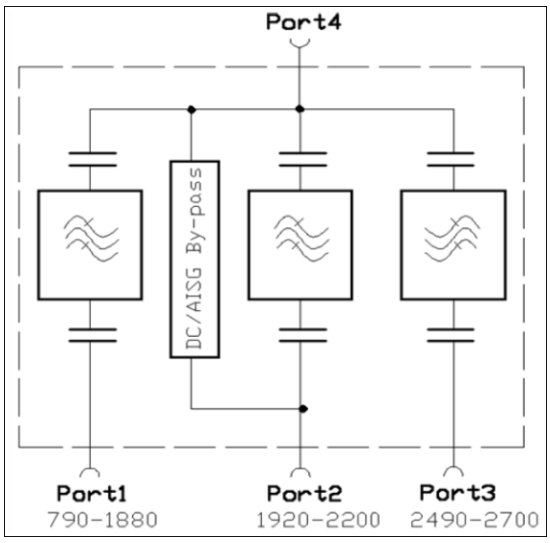

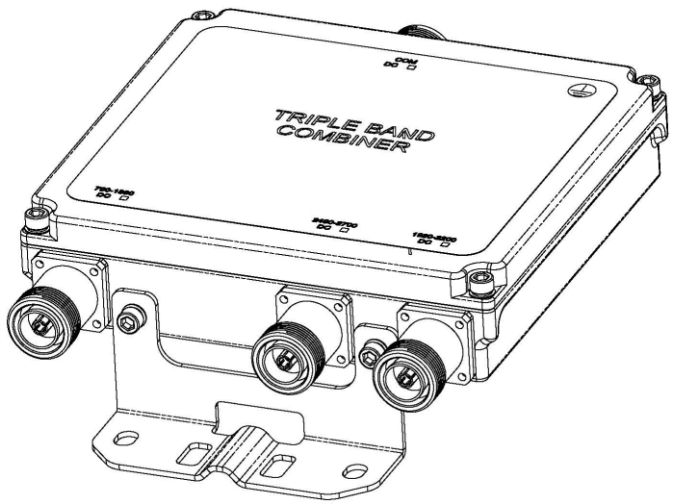

TY-C023S004(F1Vx)

900/1800 /2100 /2600 Outdoor/Indoor Triple band combiner

ELECTRICAL SPECIFICATIONS	
Port 1 Frequency Range (MHz)	790-960
Insertion Loss (dB)	0.25 Typical,0.35 max
Return Loss	⩾18 dB
Isolation(1710-2200/2490-2700MHz)	⩾45 dB
Intermodulation	<-155 dBc (3rd order, with 2 x43 dBm at 910MHz)
Port 2 Frequency Range (MHz)	1710-1880 / 1920-2200
Insertion Loss (dB)	0.35 Typical,0.4 max
Return Loss	⩾18 dB
Isolation(790-960/2490-2700MHz)	⩾45 dB
Intermodulation	<-155 dBc (7rd order, with 2 x43 dBm at 1930MHz)
Port 3 Frequency Range (MHz)	2490-2700
Insertion Loss (dB)	0.25 Typical,0.35 max
Return Loss	⩾18 dB
Isolation(790-960/1710-2200MHz)	⩾45 dB
Intermodulation	<-155 dBc (3rd order, with 2 x43 dBm at 2550MHz)
Peek Power	⩾58.6 dBm
DC Current,(Max)	2.5A

MECHANICAL SPECIFICATIONS	
Dimension HxWxD mm (body)	215x200x51mm
Weight	<4.5kg
Colors	Light grey
RF Connectors	DIN 7/16 Female
Mounting Kit	Mounting kit for pole and wall included

ENVIRONMENTAL SPECIFICATIONS

Temperature Range	-40°C to +65°C
Operational	ETS 300 019-1-4
Transportation	ETS 300 019-1-2
Storage	ETS 300 019-1-1
Lightning Protection	IEC61000-4-5
Housing	Aluminum
MTBF	>500,000 hours
Ingress Protection	IP67(Water jetting test)

APPROVAL AND TESTS

Safety	EN 60950

Part Number	Product Type	DC Configuration		
		DC pass In 790~960 MHz band	DC pass in 1710~1880/1920-2200 MHz band	DC pass in 2490~2700 MHz band
TY-C023S004(F1V1)	Single Unit		✓	
TY-C023S004(F1V2)	Single Unit			✓
TY-C023S004(F1V3)	Single Unit	✓		
TY-C023S004(F1V4)	Single Unit		✓	✓
TY-C023S004(F1V5)	Single Unit	✓	✓	
TY-C023S004(F1V6)	Single Unit	✓		✓
TY-C023S004(F1V7)	Single Unit	✓	✓	✓
TY-C023S004(F1V8)	Single Unit			

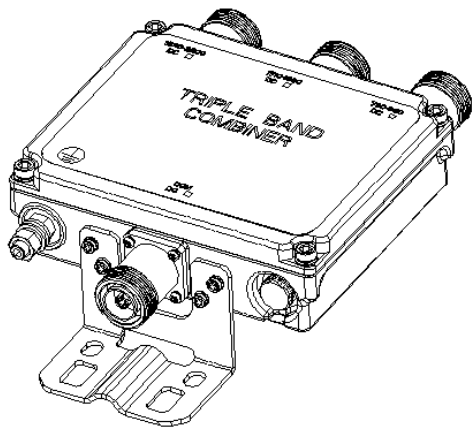

TY-C123S002(F1V2)

1800/2100/2600 Outdoor/Indoor Triple band combiner

ELECTRICAL SPECIFICATIONS	
1800 port Frequency Range (MHz)	1710-1880
Insertion Loss (dB)	0.35 Typical,0.4 max
Return Loss	⩾18dB
Isolation(1920-2200/2490-2700MHz)	⩾40 dB
Intermodulation	<-155 dBc (@ 2x43 dBm Tx carriers,IM3 at 1730MHz)
2100 port Frequency Range (MHz)	1920-2200
Insertion Loss (dB)	0.35 Typical,0.4 max
Return Loss	⩾18dB
Isolation(1710-1880/2490-2700MHz)	⩾40 dB
Intermodulation	<-155 dBc (@ 2x43 dBm Tx carriers,IM7 at 1930MHz)
2600 port Frequency Range (MHz)	2490-2700
Insertion Loss (dB)	0.35 Typical,0.4 max
Return Loss	⩾18dB
Isolation(1710-1880/1920-2200MHz)	⩾40 dB
Intermodulation	<-155 dBc (@ 2x43 dBm Tx carriers,IM3 at 2550MHz)
Peek Power	⩾58.6 dBm
DC Current,(Max)	2.5A

MECHANICAL SPECIFICATIONS	
Dimension HxWxD mm (body)	141 x 168 x 50 mm (filter body)
Weight	⩽5 kg(net weight)
Colors	Light grey
RF Connectors	DIN 7/16 Female
Mounting Kit	Mounting kit for pole and wall included

ENVIRONMENTAL SPECIFICATIONS	
Temperature Range	-40°C to +65°C
Operational	ETS 300 019-1-4
Transportation	ETS 300 019-1-2
Storage	ETS 300 019-1-1
Lightning Protection	IEC61000-4-5
Housing	Aluminum
MTBF	>500,000 hours per TMA
Ingress Protection	IP67(Water jetting test)

APPROVAL AND TESTS	
Safety	EN 60950

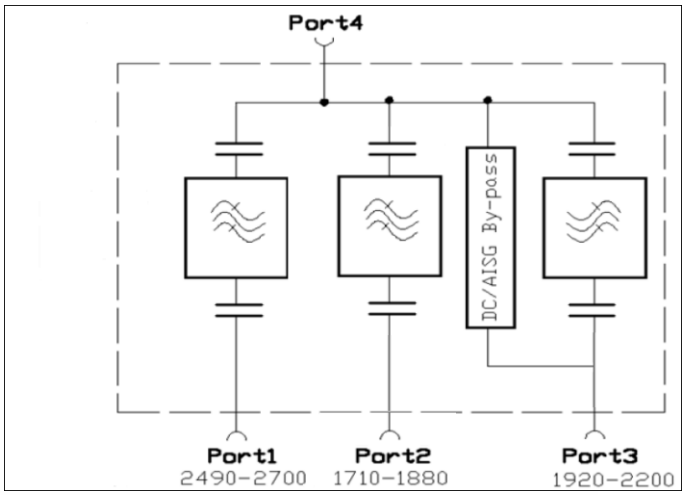

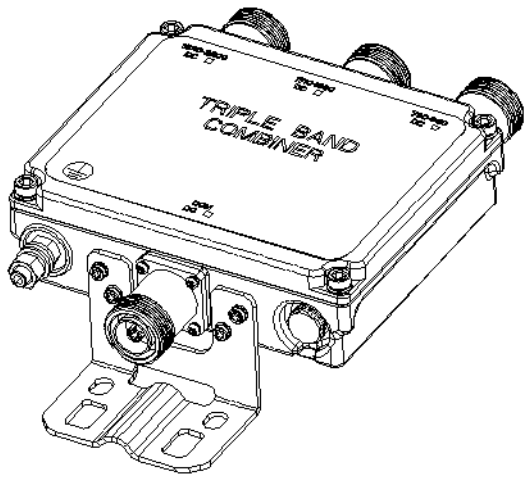

TY-C024S001(F1V2)

900/1800/2100/2600 Outdoor/Indoor Quad band combiner

ELECTRICAL SPECIFICATIONS	
900port Frequency Range (MHz)	790-960
Insertion Loss (dB)	0.25 Typical,0.35 max
Return Loss	⩾18 dB
Isolation(1710-2200/2490-2700MHz)	⩾45 dB
1800 port Frequency Range (MHz)	1710-1880
Insertion Loss (dB)	0.35Typical,0.4 max
Return Loss	⩾18 dB
Isolation (790-960/1920-2200/2490-2700MHz)	⩾45 dB
Intermodulation	<-155 dBc (3rd order, with 2 x43 dBm)
2100 port Frequency Range (MHz)	1920-2200
Insertion Loss (dB)	0.35 Typical,0.4 max
Return Loss	⩾18dB
Isolation (790-960/1710-1880/2490-2700MHz)	⩾45 dB
Intermodulation	<-155 dBc (7rd order, with 2 x43 dBm)
2600 port Frequency Range (MHz)	2490-2700
Insertion Loss (dB)	0.25 Typical,0.35 max
Return Loss	⩾18dB
Isolation(790-960/1710-2200MHz)	⩾45 dB
Intermodulation	<-155 dBc (3rd order, with 2 x43 dBm)

MECHANICAL SPECIFICATIONS

Dimension HxWxD mm (body)	215x200x51mm (filter body)
Weight	<4.5kg (net weight)
Colors	Light grey
RF Connectors	DIN 7/16 Female
Mounting Kit	Mounting kit for pole and wall included

ENVIRONMENTAL SPECIFICATIONS

Temperature Range	-40°C to +65°C
Operational	ETS 300 019-1-4
Transportation	ETS 300 019-1-2
Storage	ETS 300 019-1-1
Lightning Protection	IEC61000-4-5
Housing	Aluminum
MTBF	>500,000 hours
Ingress Protection	IP67(Water jetting test)

APPROVAL AND TESTS

Safety	EN 60950

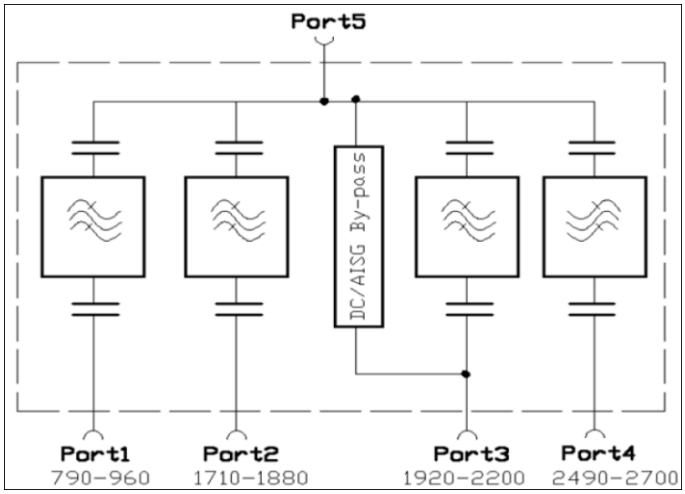

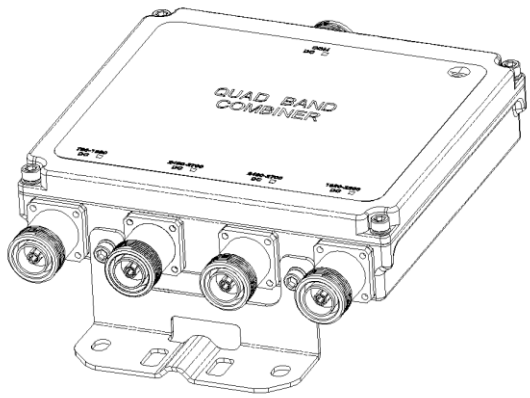

Double Unit Combiner

Double Unit Combiner	
TYT-DBC0012F1Vx	72-73
TYT-DBC0012F4Vx	74-75
TYT-DBC1821	76-77
TYT-TBC091821	78-79
TYT-C002D001(F1V2)	80-81
TYT-C022D001(F1V2)	82-83
TYT-C022D002(F1V2)	84-85
TYT-C022D003(F1V2)	86-87
TYT-C122D001(F1V2)	88-89
TYT-C122D002(F1V2)	90-91
TYT-C122D003(F1V2)	92-93
TYT-C023D001(F1V2)	94-95
TYT-C023D002(F1V2)	96-97
TYT-C023D004(F1Vx)	98-99
TYT-C123D002(F1V2)	100-101
TYT-C024D001(F1V2)	102-103

TYT-DBC0012F1Vx

700MHz/GSM850/GSM900/GSM1800/UMTS2100 Outdoor/Indoor Dual band combiner

ELECTRICAL SPECIFICATIONS	
1800 port Frequency Range (MHz)	806 - 960
Insertion Loss (dB)	0.10 Typical,0.20 max
Return Loss	⩾20.8 dB
Isolation(1710-2170MHz)	⩾57 dB
Intermodulation (Normal test GSM900)	<-155 dBc (@ 2x43 dBm Tx carriers,IM3 at 910MHz)
2100 port Frequency Range (MHz)	1710 - 2170
TX Insertion Loss (dB)	0.25 Typical,0.3 max
TX Return Loss	⩾20.8 dB
Isolation(806-960MHz)	⩾46 dB
Intermodulation (Normal test DCS1800)	<-155 dBc (@ 2x43 dBm Tx carriers,IM3 at 1730MHz)
Peek Power	⩾58.6 dBm
DC Current,(Max)	2.5A

MECHANICAL SPECIFICATIONS	
Dimension HxWxD mm (body)	217x127x65mm
Weight	<6.4kg
Colors	Light grey
RF Connectors	DIN 7/16 Female
Mounting Kit	Mounting kit for pole and wall included

ENVIRONMENTAL SPECIFICATIONS	
Temperature Range	-40°C to +65°C
Operational	ETS 300 019-1-4
Transportation	ETS 300 019-1-2
Storage	ETS 300 019-1-1
Lightning Protection	IEC61000-4-5
Housing	Aluminum
MTBF	>500,000 hours per TMA
Ingress Protection	IP66(Water jetting test)

APPROVAL AND TESTS	
Safety	EN 60950

Part Number	Product Type	DC Configuration			
		Full DC pass	DC pass in low frequency band	DC pass in high frequency band	No DC pass
TYT-DBC0012F1V1	Double Wall/Pole Mounting Bracket Kit		√		
TYT-DBC0012F1V2	Double Wall/Pole Mounting Bracket Kit			√	
TYT-DBC0012F1V3	Double Wall/Pole Mounting Bracket Kit				√
TYT-DBC0012F1V4	Double Wall/Pole Mounting Bracket Kit	√			

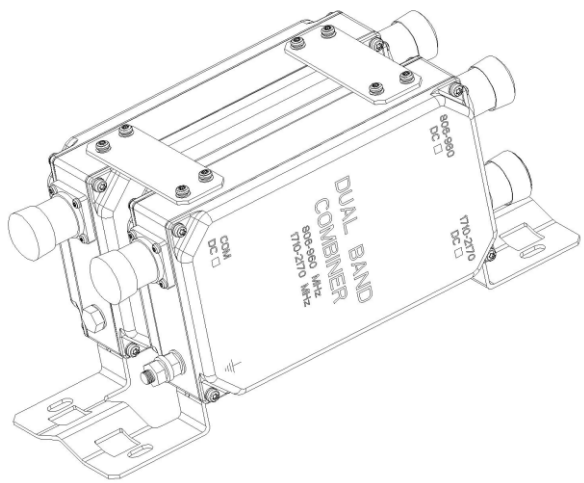

TYT-DBC0012F4Vx

700MHz/GSM850/GSM900/GSM1800/UMTS2100 Outdoor/Indoor Dual band combiner

ELECTRICAL SPECIFICATIONS	
1800 port Frequency Range (MHz)	696 - 960
Insertion Loss (dB)	0.10 Typical,0.20 max
Return Loss	⩾20.8 dB
Isolation(1710-2170MHz)	⩾57 dB
Intermodulation (Normal test GSM900)	<-150 dBc (@ 2x43 dBm Tx carriers,IM3 at 910MHz)
2100 port Frequency Range (MHz)	1710 - 2170
TX Insertion Loss (dB)	0.25 Typical,0.3 max
TX Return Loss	⩾20.8 dB
Isolation(696-960MHz)	⩾46 dB
Intermodulation (Normal test DCS1800)	<-155 dBc (@ 2x43 dBm Tx carriers,IM3 at 1730MHz)
Peek Power	⩾58.6 dBm
DC Current,(Max)	2.5A

MECHANICAL SPECIFICATIONS	
Dimension HxWxD mm (body)	217x127x65mm
Weight	<6.4kg
Colors	Light grey
RF Connectors	DIN 7/16 Female
Mounting Kit	Mounting kit for pole and wall included

ENVIRONMENTAL SPECIFICATIONS	
Temperature Range	-40°C to +65°C
Operational	ETS 300 019-1-4
Transportation	ETS 300 019-1-2
Storage	ETS 300 019-1-1
Lightning Protection	IEC61000-4-5
Housing	Aluminum
MTBF	>500,000 hours per TMA
Ingress Protection	IP66(Water jetting test)

APPROVAL AND TESTS	
Safety	EN 60950

Part Number	Product Type	DC Configuration			
		Full DC pass	DC pass in low frequency band	DC pass in high frequency band	No DC pass
TYT-DBC0012F4V1	Double Wall/Pole Mounting Bracket Kit		√		
TYT-DBC0012F4V2	Double Wall/Pole Mounting Bracket Kit			√	
TYT-DBC0012F4V3	Double Wall/Pole Mounting Bracket Kit				√
TYT-DBC0012F4V4	Double Wall/Pole Mounting Bracket Kit	√			

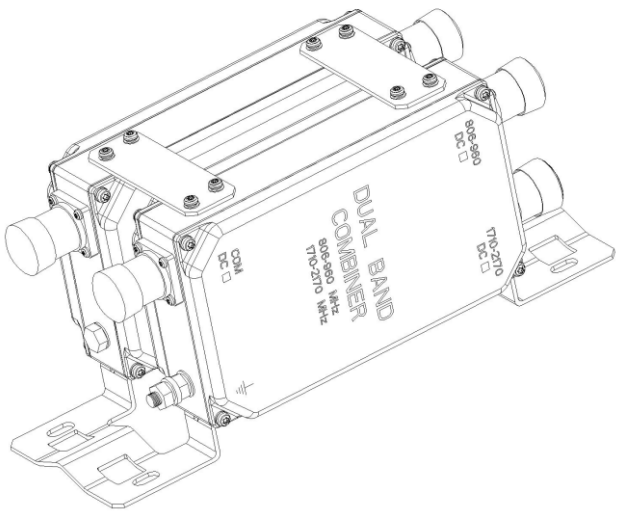

TYT-DBC1821-XX

GSM1800/UMTS2100 Outdoor/Indoor Dual band combiner

ELECTRICAL SPECIFICATIONS	
1800 port Frequency Range (MHz)	1710 -1880
Insertion Loss (dB)	0.25 Typical,0.3 max
Return Loss	⩾20.8 dB
Isolation(1920-2170MHz)	⩾40 dB
Intermodulation	<-155 dBc (@ 2x43 dBm Tx carriers,IM3 at 1730MHz)
2100 port Frequency Range (MHz)	1920-2170
TX Insertion Loss (dB)	0.25 Typical,0.3 max
TX Return Loss	⩾20.8 dB
Isolation(1710-1880MHz)	⩾40 dB
Intermodulation	<-155 dBc (@ 2x43 dBm Tx carriers,IM7 at 1930MHz)
Peek Power	⩾58.6 dBm
DC Current,(Max)	2.5A

MECHANICAL SPECIFICATIONS	
Dimension HxWxD mm (body)	217x127x65mm
Weight	<6kg
Colors	Light grey
RF Connectors	DIN 7/16 Female
Mounting Kit	Mounting kit for pole and wall included

ENVIRONMENTAL SPECIFICATIONS	
Temperature Range	-40°C to +65°C
Operational	ETS 300 019-1-4
Transportation	ETS 300 019-1-2
Storage	ETS 300 019-1-1
Lightning Protection	IEC61000-4-5
Housing	Aluminum
MTBF	>500,000 hours per TMA
Ingress Protection	IP66(Water jetting test)

APPROVAL AND TESTS	
Safety	EN 60950

Part Number	Product Type	DC Configuration	
		DC pass in 1710~1880 MHz band	DC pass in 1920~2170 MHz band
TYT-DBC1821-O	Double Wall/Pole Mounting Bracket Kit		
TYT-DBC1821-F	Double Wall/Pole Mounting Bracket Kit	✓	✓
TYT-DBC1821-21	Double Wall/Pole Mounting Bracket Kit		✓
TYT-DBC1821-18	Double Wall/Pole Mounting Bracket Kit	✓	

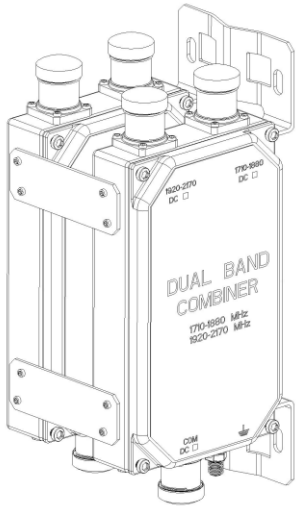

TYT-TBC091821-XX

GSM900/GSM1800/UMTS2100 Indoor/Outdoor Crossband Triplexer

ELECTRICAL SPECIFICATIONS	
900 port Frequency Range (MHz)	806 -960
Insertion Loss (dB)	0.25 Typical,0.3 max
Return Loss	⩾20.8 dB
Isolation(1710-2170MHz)	⩾40 dB
Intermodulation	<-155 dBc (@ 2x43 dBm Tx carriers,IM3 at 910MHz)
1800 port Frequency Range (MHz)	1710 -1880
Insertion Loss (dB)	0.25 Typical,0.3 max
Return Loss	⩾20.8 dB
Isolation(1920-2170MHz)	⩾40 dB
Intermodulation	<-155 dBc (@ 2x43 dBm Tx carriers,IM3 at 1730MHz)
2100 port Frequency Range (MHz)	1920-2170
TX Insertion Loss (dB)	0.25 Typical,0.3 max
TX Return Loss	⩾20.8 dB
Isolation(1710-1880MHz)	⩾40 dB
Intermodulation	<-155 dBc (@ 2x43 dBm Tx carriers,IM7 at 1930MHz)
Peek Power	⩾58.6 dBm
DC Current,(Max)	2.5A

MECHANICAL SPECIFICATIONS	
Dimension HxWxD mm (body)	236x168x52.5mm
Weight	<8.5kg
Colors	Light grey
RF Connectors	DIN 7/16 Female
Mounting Kit	Mounting kit for pole and wall included

ENVIRONMENTAL SPECIFICATIONS

Temperature Range	-40°C to +65°C
Operational	ETS 300 019-1-4
Transportation	ETS 300 019-1-2
Storage	ETS 300 019-1-1
Lightning Protection	IEC61000-4-5
Housing	Aluminum
MTBF	>500,000 hours per TMA
Ingress Protection	IP66(Water jetting test)

APPROVAL AND TESTS

Safety	EN 60950

Part Number	Product Type	DC Configuration	
		DC pass In 800~960 MHz band	DC pass in 1710~1880 MHz band
TYT-TBC091821-F	Double Wall/Pole Mounting Bracket Kit	✓	✓
TYT-TBC091821-1821	Double Wall/Pole Mounting Bracket Kit		✓
TYT-TBC091821-21	Double Wall/Pole Mounting Bracket Kit		
TYT-TBC091821-18	Double Wall/Pole Mounting Bracket Kit		✓
TYT-TBC091821-09	Double Wall/Pole Mounting Bracket Kit	✓	
TYT-TBC091821-0918	Double Wall/Pole Mounting Bracket Kit	✓	✓
TYT-TBC091821-0921	Double Wall/Pole Mounting Bracket Kit	✓	
TYT-TBC091821-O	Double Wall/Pole Mounting Bracket Kit		

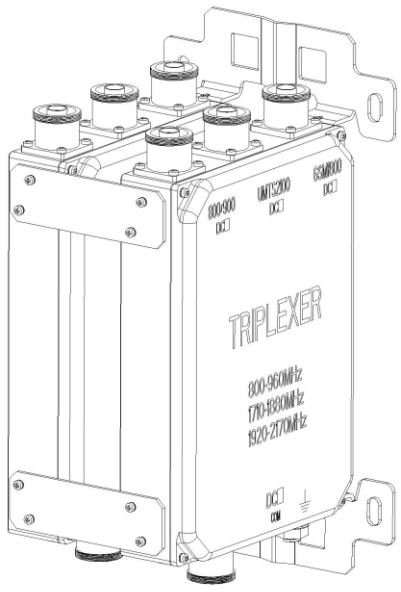

TYT-C002D001(F1V2)

DD800/GSM900 Outdoor/Indoor Dual band combiner

ELECTRICAL SPECIFICATIONS	
DD800 port Frequency Range (MHz)	790-862
Insertion Loss (dB)	0.35 Typical,0.4 max
Return Loss	⩾18 dB
Isolation(880-960MHz)	⩾50 dB
Intermodulation	<-155dBc (@ 2x43 dBm Tx carriers,IM3 at 851MHz)
GSM900 port Frequency Range (MHz)	880-960
Insertion Loss (dB)	0.35 Typical,0.4 max
Return Loss	⩾18dB
Isolation(790-862MHz)	⩾50 dB
Intermodulation	<-155dBc (@ 2x43 dBm Tx carriers,IM3 at 910MHz)
Peek Power	⩾58.6 dBm
DC Current,(Max)	2.5A

MECHANICAL SPECIFICATIONS	
Dimension HxWxD mm	Double Unit: 210x180x107mm(filter body), 392x282x240mm(Package Dimension)
Weight	Double Unit: ⩽7 kg(net weight), ⩽8 kg(Gross weight)
Colors	Light grey
RF Connectors	DIN 7/16 Female
Mounting Kit	Mounting kit for pole and wall included

ENVIRONMENTAL SPECIFICATIONS	
Temperature Range	-40°C to +65°C
Operational	ETS 300 019-1-4
Transportation	ETS 300 019-1-2
Storage	ETS 300 019-1-1
Lightning Protection	IEC61000-4-5
Housing	Aluminum
MTBF	>500,000 hours
Ingress Protection	IP67(Water jetting test)

APPROVAL AND TESTS	
Safety	EN 60950

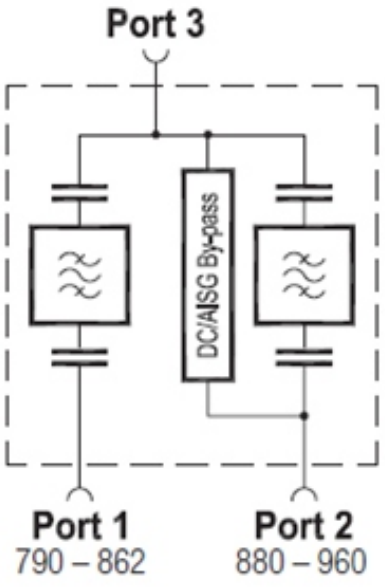

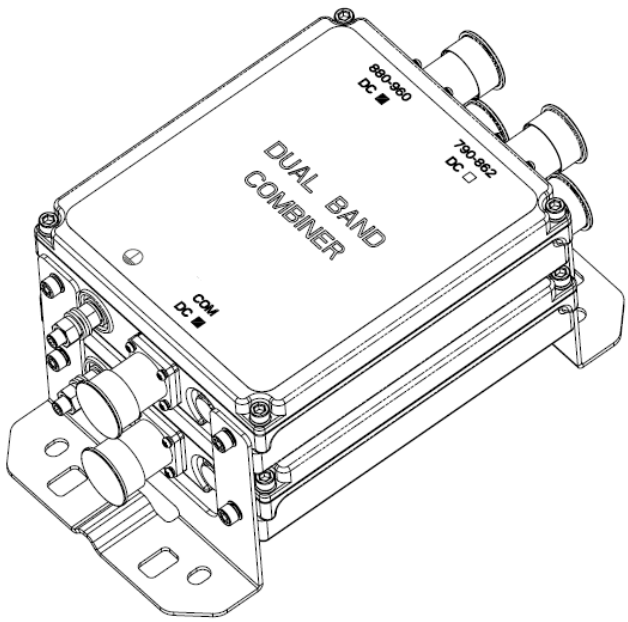

TYT-C022D001(F1V2)

698-960/1710-2700 Outdoor/Indoor Dual band combiner

ELECTRICAL SPECIFICATIONS	
Port1-Port3 Frequency Range (MHz)	698-960
Insertion Loss (dB)	0.25 Typical,0.3 max
Return Loss	⩾18 dB
Isolation(1710-2700MHz)	⩾40 dB
Intermodulation	<-155dBc (3rd order, with 2x43 dBm)
Port2-Port3 Frequency Range (MHz)	1710-2700
Insertion Loss (dB)	0.3 Typical,0.4 max@1710-2000MHz 0.35 Typical,0.4 max@2000-2700MHz
Return Loss	⩾18dB
Isolation(698-960MHz)	⩾40 dB
Intermodulation	<-155dBc (3rd order, with 2x43 dBm)
Power Handing	58.6dBm
DC Pass Current	2.5A

MECHANICAL SPECIFICATIONS	
Dimension HxWxD mm (body)	Double Unit: 145x140x103mm (filter body), 343x231x241mm(Package Dimension)
Weight	Double Unit: ⩽5 kg(net weight), ⩽6 kg(Gross weight)
Colors	Light grey
RF Connectors	DIN 7/16 Female
Mounting Kit	Mounting kit for pole and wall included

ENVIRONMENTAL SPECIFICATIONS	
Temperature Range	-40°C to +65°C
Operational	ETS 300 019-1-4
Transportation	ETS 300 019-1-2
Storage	ETS 300 019-1-1
Lightning Protection	IEC61000-4-5
Housing	Aluminum
MTBF	>500,000 hours
Ingress Protection	IP67(Water jetting test)

APPROVAL AND TESTS	
Safety	EN 60950

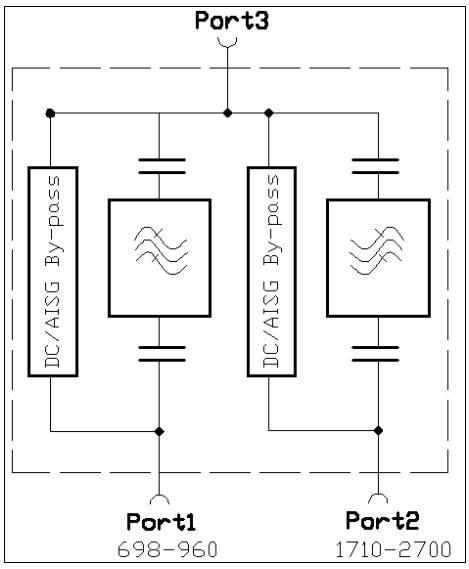

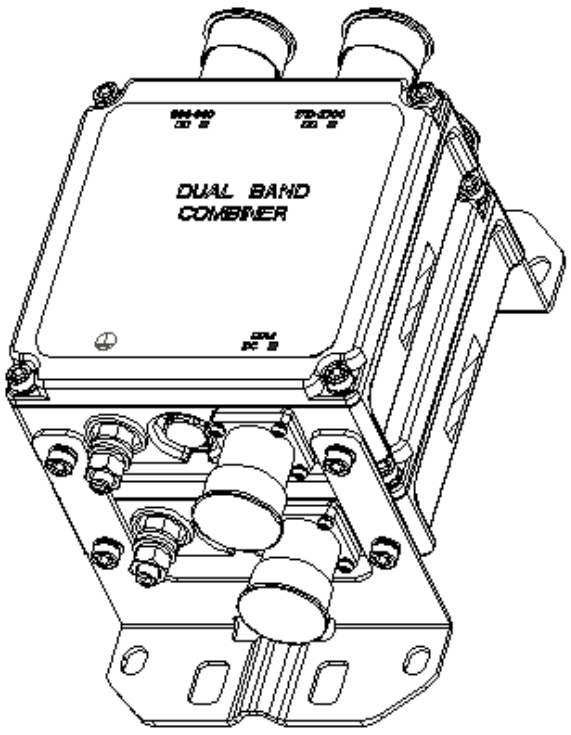

TYT-C022D002(F1V2)

790-1800/1920-2200 Outdoor/Indoor Dual band combiner

ELECTRICAL SPECIFICATIONS	
Port1 Frequency Range (MHz)	790-960/1710-1880
Insertion Loss (dB)	0.25Typical,0.35 max @790-960MHz 0.3 Typical,0.4 max @1710-1880MHz
Return Loss	⩾18 dB
Isolation(1920-2200MHz)	⩾45 dB
Intermodulation	<-160 dBc (@ 2x43 dBm Tx carriers,IM3)
Port2 Frequency Range (MHz)	1920-2200
Insertion Loss (dB)	0.3 Typical,0.4 max
Return Loss	⩾18dB
Isolation(790-960/1710-1880MHz)	⩾45 dB
Intermodulation	<-160dBc (@ 2x43 dBm Tx carriers,IM3 at 2050MHz)
Peek Power	⩾58.6 dBm
DC Current,(Max)	2.5A

MECHANICAL SPECIFICATIONS	
Dimension HxWxD mm	Double Unit:190x154x105mm(filter body), 344x281x252mm(Package Dimension)
Weight	Double Unit:⩽6kg (net weight), ⩽7kg (Gross weight)
Colors	Light grey
RF Connectors	DIN 7/16 Female
Mounting Kit	Mounting kit for pole and wall included

ENVIRONMENTAL SPECIFICATIONS	
Temperature Range	-40°C to +65°C
Operational	ETS 300 019-1-4
Transportation	ETS 300 019-1-2
Storage	ETS 300 019-1-1
Lightning Protection	IEC61000-4-5
Housing	Aluminum
MTBF	>500,000 hours
Ingress Protection	IP67(Water jetting test)

APPROVAL AND TESTS	
Safety	EN 60950

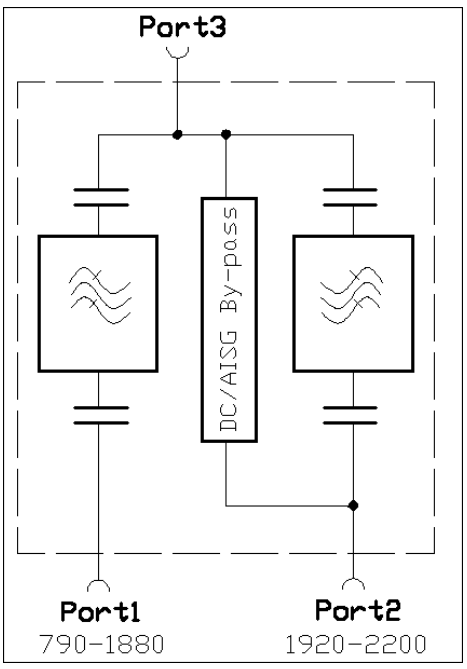

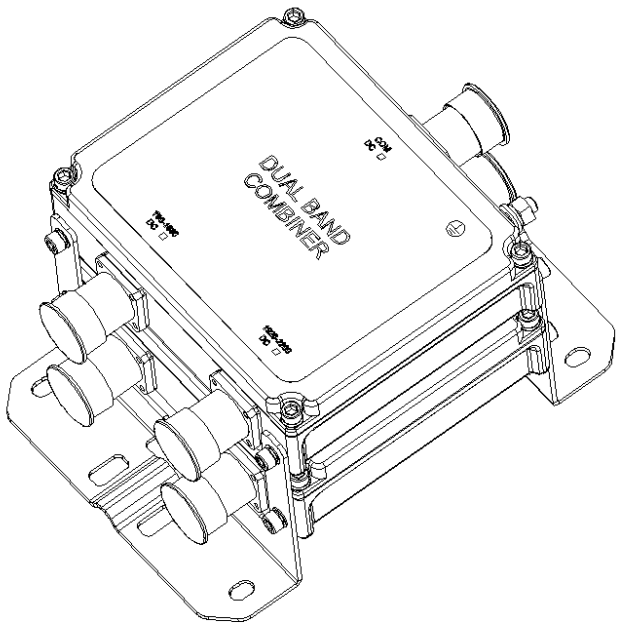

TYT-C022D003(F1V2)

698-960/1710-2700 Outdoor/Indoor Dual band combiner

ELECTRICAL SPECIFICATIONS	
Port1-Port3 Frequency Range (MHz)	698-960
Insertion Loss (dB)	0.25 Typical,0.3 max
Return Loss	⩾18 dB
Isolation(1710-2700MHz)	⩾40 dB
Intermodulation	<-155dBc (3rd order, with 2x43 dBm)
Port2-Port3 Frequency Range (MHz)	1710-2700
Insertion Loss (dB)	0.3 Typical,0.4 max@1710-2000MHz 0.35 Typical,0.4 max@2000-2700MHz
Return Loss	⩾18dB
Isolation(698-960MHz)	⩾40 dB
Intermodulation	<-155dBc (3rd order, with 2x43 dBm)
Power Handing	⩾58.6 dBm
DC Pass Current	2.5A

MECHANICAL SPECIFICATIONS	
Dimension HxWxD mm (body)	Double Unit: 145x140x103mm (filter body), 343x231x241mm(Package Dimension)
Weight	Double Unit: ⩽5 kg(net weight), ⩽6 kg(Gross weight)
Colors	Light grey
RF Connectors	DIN 7/16 Female
Mounting Kit	Mounting kit for pole and wall included

ENVIRONMENTAL SPECIFICATIONS	
Temperature Range	-40°C to +65°C
Operational	ETS 300 019-1-4
Transportation	ETS 300 019-1-2
Storage	ETS 300 019-1-1
Lightning Protection	IEC61000-4-5
Housing	Aluminum
MTBF	>500,000 hours
Ingress Protection	IP67(Water jetting test)

APPROVAL AND TESTS	
Safety	EN 60950

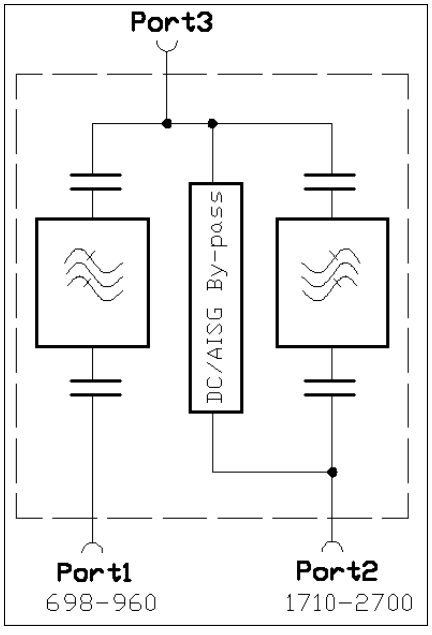

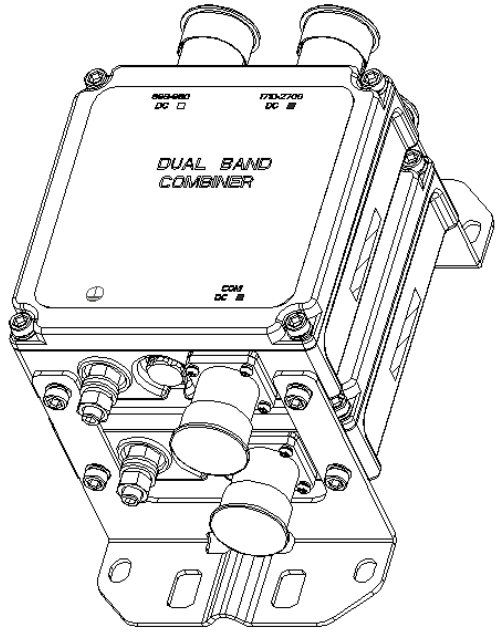

TYT-C122D001(F1V2)

GSM1800/UMTS2100/LTE2600 Outdoor/Indoor Dual band combiner

ELECTRICAL SPECIFICATIONS	
1800/2100 port Frequency Range (MHz)	1710-2200
Insertion Loss (dB)	0.25 Typical,0.35 max
Return Loss	⩾18 dB
Isolation(2490-2700MHz)	⩾45 dB
Intermodulation	<-155dBc (@ 2x43 dBm Tx carriers,IM3 at 2050MHz)
2600 port Frequency Range (MHz)	2490-2700
Insertion Loss (dB)	0.25 Typical,0.35 max
Return Loss	⩾18dB
Isolation(1710-2200MHz)	⩾45 dB
Intermodulation	<-155dBc (@ 2x43 dBm Tx carriers,IM3 at 2550MHz)
Peek Power	⩾58.6 dBm
DC Current,(Max)	2.5A

MECHANICAL SPECIFICATIONS	
Dimension HxWxD mm (body)	126x 102 x 103mm(filter body), 282x 216 x 246mm(Package Dimension)
Weight	Double Unit: ⩽4kg(net weight), Double Unit: ⩽5kg(Gross weight)
Colors	Light grey
RF Connectors	DIN 7/16 Female
Mounting Kit	Mounting kit for pole and wall included

ENVIRONMENTAL SPECIFICATIONS	
Temperature Range	-40°C to +65°C
Operational	ETS 300 019-1-4
Transportation	ETS 300 019-1-2
Storage	ETS 300 019-1-1
Lightning Protection	IEC61000-4-5
Housing	Aluminum
MTBF	>500,000 hours
Ingress Protection	IP67(Water jetting test)

APPROVAL AND TESTS	
Safety	EN 60950

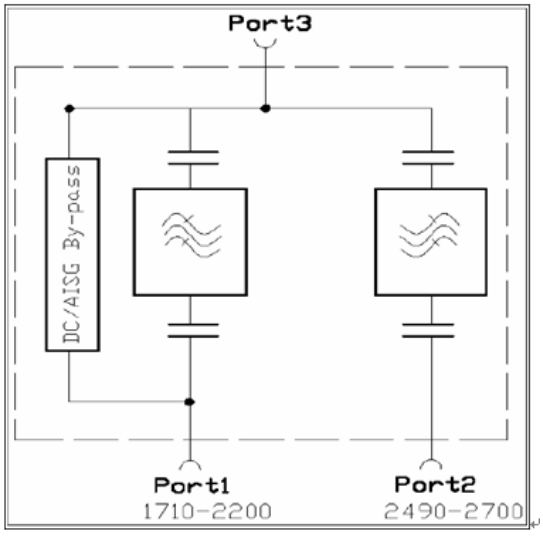

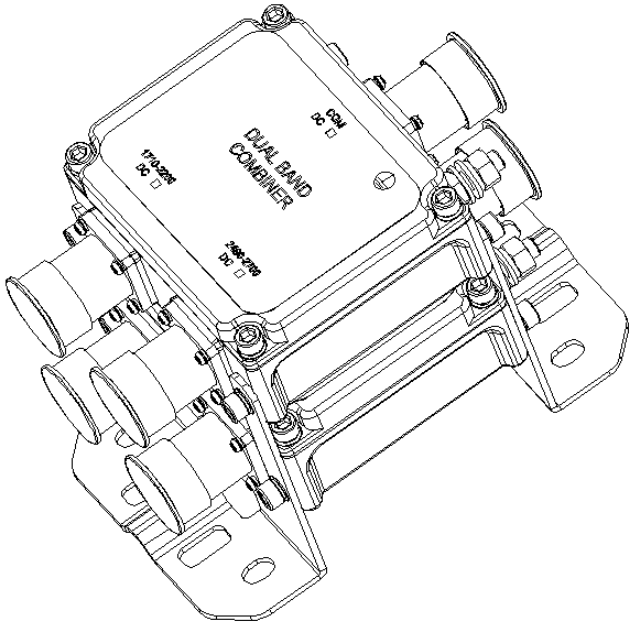

TYT-C122D002(F1V2)

GSM1800/UMTS2100 Outdoor/Indoor Dual band combiner

ELECTRICAL SPECIFICATIONS	
1800 port Frequency Range (MHz)	1710 - 1880
Insertion Loss (dB)	0.35 Typical,0.4 max
Return Loss	⩾18 dB
Isolation(1920-2200MHz)	⩾40 dB
Intermodulation	<-155dBc (@ 2x43 dBm Tx carriers,IM3 at 1730MHz)
2100 port Frequency Range (MHz)	1920 - 2200
TX Insertion Loss (dB)	0.35 Typical,0.4 max
TX Return Loss	⩾18 dB
Isolation(1710-1880MHz)	⩾40 dB
Intermodulation	<-155 dBc (@ 2x43 dBm Tx carriers,IM7 at 1930MHz)
Peek Power	⩾58.6 dBm
DC Current,(Max)	2.5A

MECHANICAL SPECIFICATIONS	
Dimension HxWxD mm (body)	138x130x103mm (filter body), 315x223x241mm (Package Dimension)
Weight	⩽6kg(net weight), ⩽7kg(gross weight)
Colors	Light grey
RF Connectors	DIN 7/16 Female
Mounting Kit	Mounting kit for pole and wall included

ENVIRONMENTAL SPECIFICATIONS	
Temperature Range	-40°C to +65°C
Operational	ETS 300 019-1-4
Transportation	ETS 300 019-1-2
Storage	ETS 300 019-1-1
Lightning Protection	IEC61000-4-5
Housing	Aluminum
MTBF	>500,000 hours
Ingress Protection	IP67(Water jetting test)

APPROVAL AND TESTS	
Safety	EN 60950

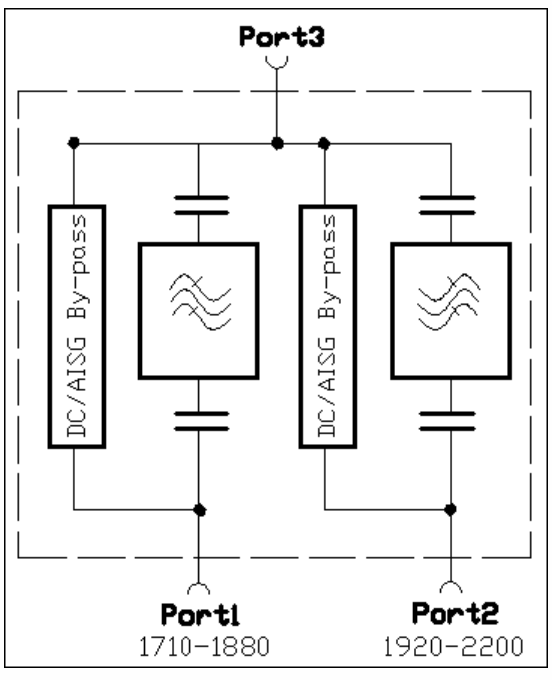

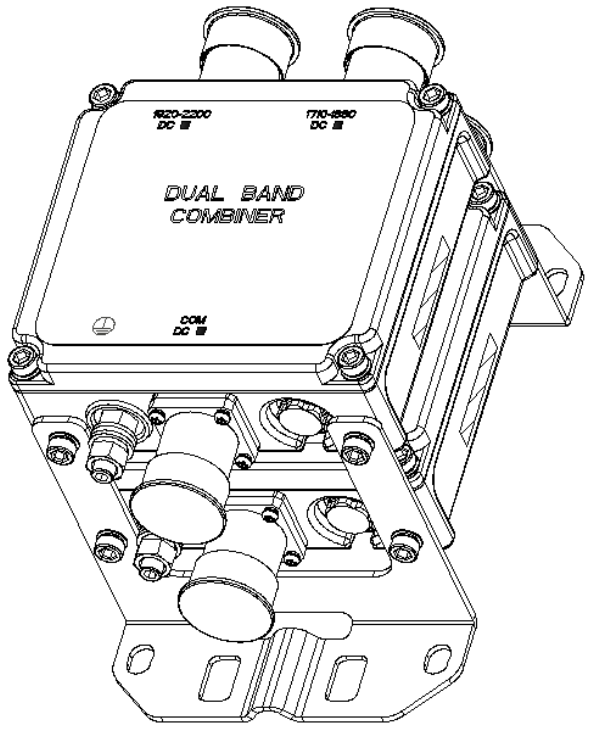

TYT-C122D003(F1V2)

GSM1800/UMTS2100 Outdoor/Indoor Dual band combiner

ELECTRICAL SPECIFICATIONS	
1800 port Frequency Range (MHz)	1710 - 1880
Insertion Loss (dB)	0.35 Typical,0.4 max
Return Loss	⩾18 dB
Isolation(1920-2200MHz)	⩾40 dB
Intermodulation	<-155dBc (@ 2x43 dBm Tx carriers,IM3 at 1730MHz)
2100 port Frequency Range (MHz)	1920 - 2200
TX Insertion Loss (dB)	0.35 Typical,0.4 max
TX Return Loss	⩾18 dB
Isolation(1710-1880MHz)	⩾40 dB
Intermodulation	<-155 dBc (@ 2x43 dBm Tx carriers,IM7 at 1930MHz)
Peek Power	⩾58.6 dBm
DC Current,(Max)	2.5A

MECHANICAL SPECIFICATIONS	
Dimension HxWxD mm (body)	138x130x103mm (filter body), 315x223x241mm (Package Dimension)
Weight	⩽6kg(net weight), ⩽7kg(gross weight)
Colors	Light grey
RF Connectors	DIN 7/16 Female
Mounting Kit	Mounting kit for pole and wall included

ENVIRONMENTAL SPECIFICATIONS	
Temperature Range	-40°C to +65°C
Operational	ETS 300 019-1-4
Transportation	ETS 300 019-1-2
Storage	ETS 300 019-1-1
Lightning Protection	IEC61000-4-5
Housing	Aluminum
MTBF	>500,000 hours
Ingress Protection	IP67(Water jetting test)

APPROVAL AND TESTS	
Safety	EN 60950

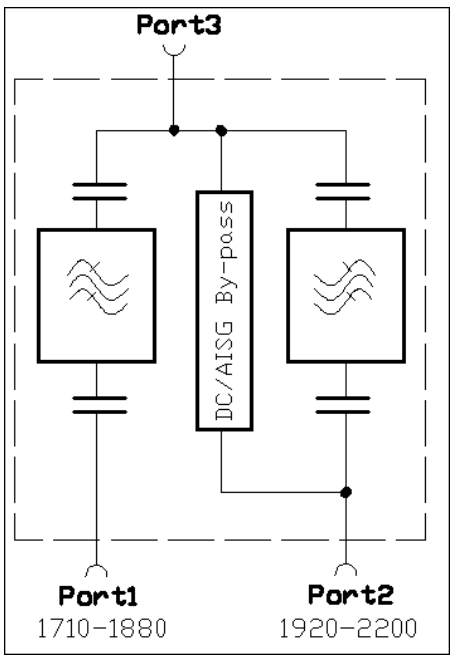

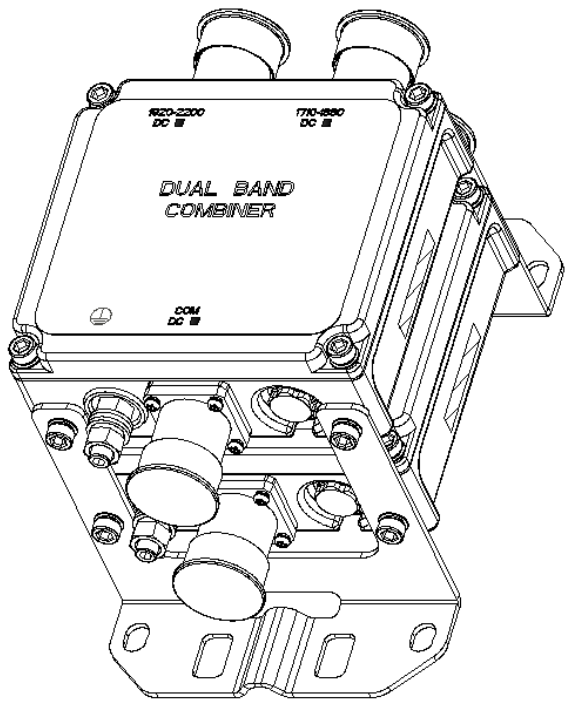

TYT-C023D001(F1V2)

900/1800/2100 Outdoor/Indoor Triple band combiner

ELECTRICAL SPECIFICATIONS	
900 port Frequency Range (MHz)	790-960
Insertion Loss (dB)	0.25 Typical,0.3 max
Return Loss	⩾18 dB
Isolation(1710-2200MHz)	⩾40 dB
Intermodulation	<-155dBc (@ 2x43 dBm Tx carriers,IM3 at 910MHz)
1800 port Frequency Range (MHz)	1710-1880
Insertion Loss (dB)	0.35 Typical,0.4 max
Return Loss	⩾18 dB
Isolation(790-960/1920-2200MHz)	⩾40 dB
Intermodulation	<-155dBc (@ 2x43 dBm Tx carriers,IM3 at 1730MHz)
2100 port Frequency Range (MHz)	1920-2200
Insertion Loss (dB)	0.35 Typical,0.4 max
Return Loss	⩾18 dB
Isolation(790-960/1710-1880MHz)	⩾40 dB
Intermodulation	<-155dBc (@ 2x43 dBm Tx carriers,IM7 at 1930MHz)
Peek Power	⩾58.6 dBm
DC Current,(Max)	2.5A

MECHANICAL SPECIFICATIONS

Dimension HxWxD mm (body)	Double Unit: 141 x 168 x 103 mm(filter body), 332x252x240 mm(Package Dimension)
Weight	Double Unit: ≤7 kg(net weight), ≤8 kg(gross weight)
Colors	Light grey
RF Connectors	DIN 7/16 Female
Mounting Kit	Mounting kit for pole and wall included

ENVIRONMENTAL SPECIFICATIONS

Temperature Range	-40°C to +65°C
Operational	ETS 300 019-1-4
Transportation	ETS 300 019-1-2
Storage	ETS 300 019-1-1
Lightning Protection	IEC61000-4-5
Housing	Aluminum
MTBF	>500,000 hours
Ingress Protection	IP67(Water jetting test)

APPROVAL AND TESTS

Safety	EN 60950

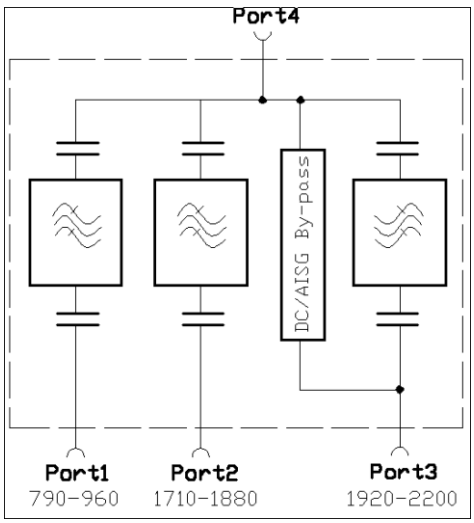

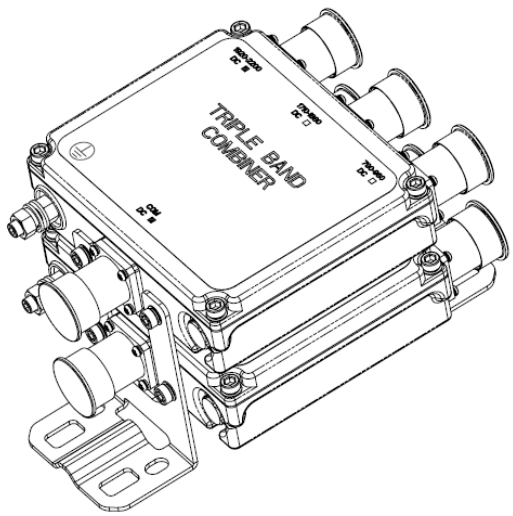

TYT-C023D002(F1V2)

900/1800/2100/2600 Outdoor/Indoor Triple band combiner

ELECTRICAL SPECIFICATIONS	
900&1800 port Frequency Range (MHz)	790-960 / 1710-1880
Insertion Loss (dB)	790-960MHz 0.25 Typical,0.35 max / 1710-1880 MHz 0.35Typical,0.4 max
Return Loss	⩾18 dB
Isolation(1710-2700MHz)	⩾45 dB
Intermodulation	<-155 dBc (3rd order, with 2 x43 dBm)
2100 port Frequency Range (MHz)	1920-2200
Insertion Loss (dB)	0.35 Typical,0.4 max
Return Loss	⩾18 dB
Isolation (790-960/1710-1880/2490-2700MHz)	⩾45 dB
Intermodulation	<-155 dBc (7rd order, with 2 x43 dBm)
2600 port Frequency Range (MHz)	2490-2700
Insertion Loss (dB)	0.25 Typical,0.35 max
Return Loss	⩾18 dB
Isolation(790-960/1710-2200MHz)	⩾45 dB
Intermodulation	<-155 dBc (3rd order, with 2 x43 dBm)
Peek Power	⩾58.6 dBm
DC Current,(Max)	2.5A

MECHANICAL SPECIFICATIONS	
Dimension HxWxD mm (body)	215x200x105mm
Weight	<7kg
Colors	Light grey
RF Connectors	DIN 7/16 Female
Mounting Kit	Mounting kit for pole and wall included

ENVIRONMENTAL SPECIFICATIONS	
Temperature Range	-40°C to +65°C
Operational	ETS 300 019-1-4
Transportation	ETS 300 019-1-2
Storage	ETS 300 019-1-1
Lightning Protection	IEC61000-4-5
Housing	Aluminum
MTBF	>500,000 hours
Ingress Protection	IP67(Water jetting test)

APPROVAL AND TESTS	
Safety	EN 60950

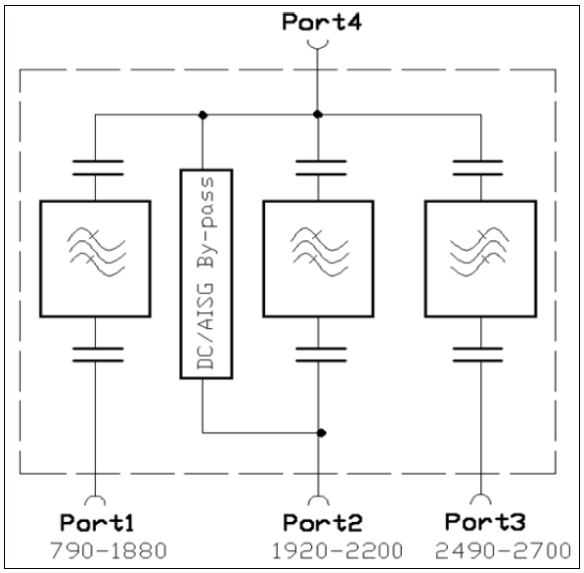

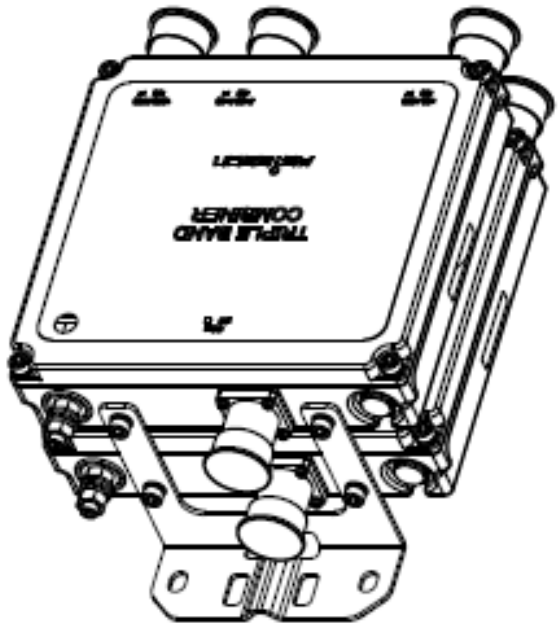

TYT-C023D004(F1Vx)

900/1800 /2100 /2600 Outdoor/Indoor Triple band combiner

ELECTRICAL SPECIFICATIONS	
Port 1 Frequency Range (MHz)	790-960
Insertion Loss (dB)	0.25 Typical,0.3 max
Return Loss	⩾18 dB
Isolation(1710-2200/2490-2700MHz)	⩾45 dB
Intermodulation	<-155 dBc (3rd order, with 2 x43 dBm at 910MHz)
Port 2 Frequency Range (MHz)	1710-1880 / 1920-2200
Insertion Loss (dB)	0.35 Typical,0.4 max
Return Loss	⩾18 dB
Isolation(790-960/2490-2700MHz)	⩾45 dB
Intermodulation	<-155 dBc (7rd order, with 2 x43 dBm at 1930MHz)
Port 3 Frequency Range (MHz)	2490-2700
Insertion Loss (dB)	0.25 Typical,0.35 max
Return Loss	⩾18 dB
Isolation(790-960/1710-2200MHz)	⩾45 dB
Intermodulation	<-155 dBc (3rd order, with 2 x43 dBm at 2550MHz)
Peek Power	⩾58.6 dBm
DC Current,(Max)	2.5A

MECHANICAL SPECIFICATIONS	
Dimension HxWxD mm (body)	215x200x105mm
Weight	<7kg
Colors	Light grey
RF Connectors	DIN 7/16 Female
Mounting Kit	Mounting kit for pole and wall included

ENVIRONMENTAL SPECIFICATIONS

Temperature Range	-40°C to +65°C
Operational	ETS 300 019-1-4
Transportation	ETS 300 019-1-2
Storage	ETS 300 019-1-1
Lightning Protection	IEC61000-4-5
Housing	Aluminum
MTBF	>500,000 hours
Ingress Protection	IP67(Water jetting test)

APPROVAL AND TESTS

Safety	EN 60950

Part Number	Product Type	DC Configuration		
		DC pass In 790~960 MHz band	DC pass in 1710~1880/1920-2200 MHz band	DC pass in 2490~2700MHz band
TYC023D004(F1V1)	Double Unit		✓	
TYC023D004(F1V2)	Double Unit			✓
TYC023D004(F1V3)	Double Unit	✓		
TYC023D004(F1V4)	Double Unit		✓	✓
TYC023D004(F1V5)	Double Unit	✓	✓	
TYC023D004(F1V6)	Double Unit	✓		✓
TYC023D004(F1V7)	Double Unit	✓	✓	✓
TYC023D004(F1V8)	Double Unit			

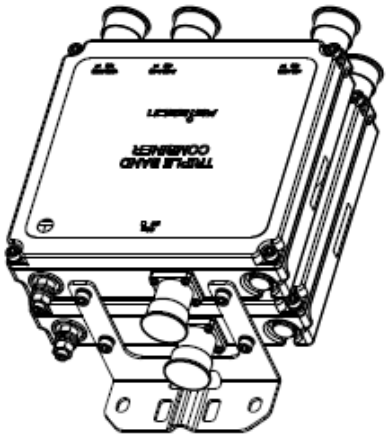

TYT-C123D002(F1V2)

1800/2100/2600 Outdoor/Indoor Triple band combiner

ELECTRICAL SPECIFICATIONS	
1800 port Frequency Range (MHz)	1710-1880
Insertion Loss (dB)	0.35 Typical,0.4 max
Return Loss	⩾18 dB
Isolation(1920-2200/2490-2700MHz)	⩾40 dB
Intermodulation	<-155dBc (@ 2x43 dBm Tx carriers,IM3 at 1730MHz)
2100 port Frequency Range (MHz)	1920-2200
Insertion Loss (dB)	0.35 Typical,0.4 max
Return Loss	⩾18 dB
Isolation(1710-1880/2490-2700MHz)	⩾40 dB
Intermodulation	<-155dBc (@ 2x43 dBm Tx carriers,IM7 at 1930MHz)
2600 port Frequency Range (MHz)	2490-2700
Insertion Loss (dB)	0.35 Typical,0.4 max
Return Loss	⩾18 dB
Isolation(1710-1880/1920-2200MHz)	⩾40 dB
Intermodulation	<-155dBc (@ 2x43 dBm Tx carriers,IM3 at 2550MHz)
Peek Power	⩾58.6 dBm
DC Current,(Max)	2.5A

MECHANICAL SPECIFICATIONS

Dimension HxWxD mm (body)	Double Unit: 141 x 168 x 103 mm(filter body), 332x252x240 mm(Package Dimension)
Weight	Double Unit: ⩽7 kg(net weight), ⩽8 kg(gross weight)
Colors	Light grey
RF Connectors	DIN 7/16 Female
Mounting Kit	Mounting kit for pole and wall included

ENVIRONMENTAL SPECIFICATIONS

Temperature Range	-40°C to +65°C
Operational	ETS 300 019-1-4
Transportation	ETS 300 019-1-2
Storage	ETS 300 019-1-1
Lightning Protection	IEC61000-4-5
Housing	Aluminum
MTBF	>500,000 hours
Ingress Protection	IP67(Water jetting test)

APPROVAL AND TESTS

Safety	EN 60950

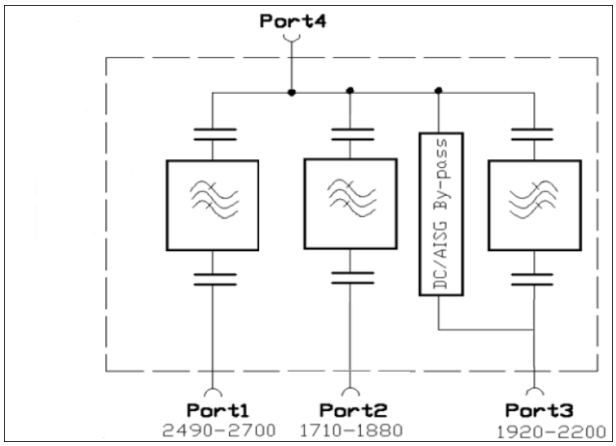

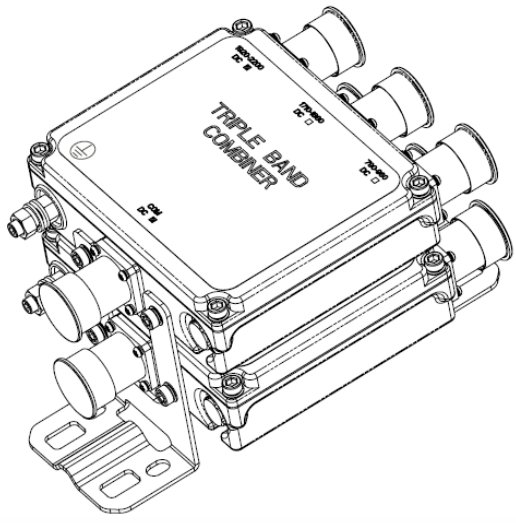

TYT-C024D001(F1V2)

900/1800/2100/2600 Outdoor/Indoor Quad band combiner

ELECTRICAL SPECIFICATIONS	
900port Frequency Range (MHz)	790-960
Insertion Loss (dB)	0.25 Typical,0.35 max
Return Loss	⩾18 dB
Isolation(1710-2200/2490-2700MHz)	⩾45 dB
1800 port Frequency Range (MHz)	1710-1880
Insertion Loss (dB)	0.35 Typical,0.4 max
Return Loss	⩾18 dB
Isolation (790-960\1920-2200/2490-2700MHz)	⩾45 dB
Intermodulation	<-155 dBc (3rd order, with 2 x43 dBm)
2100 port Frequency Range (MHz)	1920-2200
Insertion Loss (dB)	0.35 Typical,0.4 max
Return Loss	⩾18 dB
Isolation (790-960/1710-1880/2490-2700MHz)	⩾45 dB
Intermodulation	<-155 dBc (7rd order, with 2 x43 dBm)
2600 port Frequency Range (MHz)	2490-2700
Insertion Loss (dB)	0.25 Typical,0.35 max
Return Loss	⩾18 dB
Isolation(790-960/1710-2200MHz)	⩾45 dB
Intermodulation	<-155 dBc (3rd order, with 2 x43 dBm)

MECHANICAL SPECIFICATIONS

Dimension HxWxD mm (body)	215x200x105mm
Weight	<7kg
Colors	Light grey
RF Connectors	DIN 7/16 Female
Mounting Kit	Mounting kit for pole and wall included

ENVIRONMENTAL SPECIFICATIONS

Temperature Range	-40°C to +65°C
Operational	ETS 300 019-1-4
Transportation	ETS 300 019-1-2
Storage	ETS 300 019-1-1
Lightning Protection	IEC61000-4-5
Housing	Aluminum
MTBF	>500,000 hours
Ingress Protection	IP67(Water jetting test)

APPROVAL AND TESTS

Safety	EN 60950

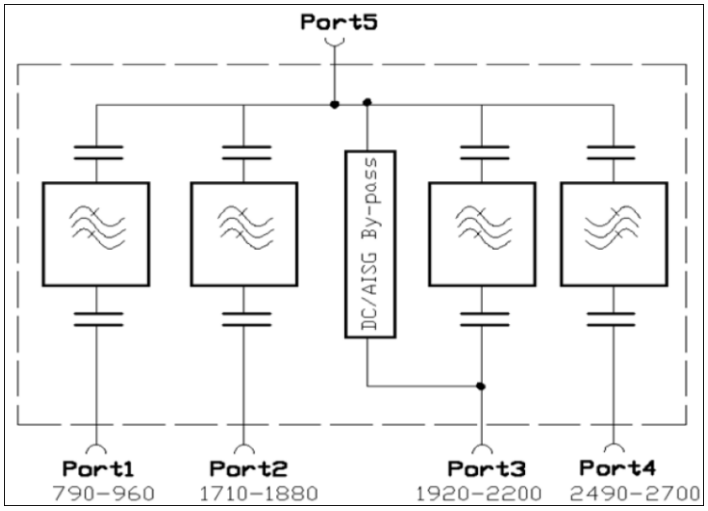

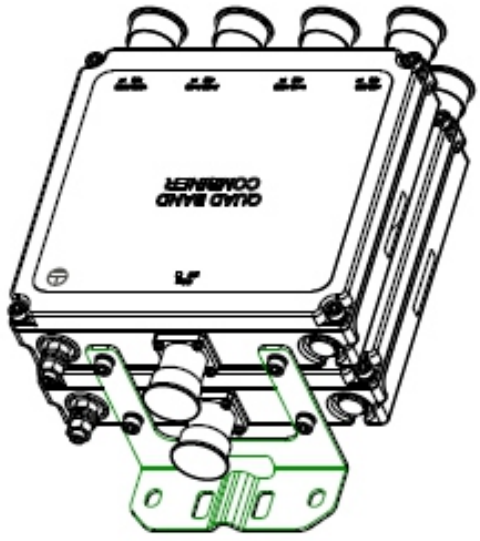

System Components

System Components	
TYBT-0822O/TYBT-0822	105–106
TYBT-0822S-12/24-XXX	107–108

TYBT-0822O/TYBT-0822

OOK BIAS TEE(800-2170MHz)

Frequency bans(MHz)			800-2170
VSWR@BTS port & ANT port		800-2170 MHz	≤1.2
Insertion loss (dB) BTS port→ ANT port		800-2170 MHz	≤0.2
PIM (dBc) (3rd order 2x20W) 900MHz & 1800MHz			≤160
Power handling		800-2170MHz	≥120W
Isolation	BTS port → DC/OOK port	2.175MHz+/-400KHz	≥20dB
	BTS port → DC/OOK port ANT port → DC/OOK port	30MHz~150MHz	≥2dB
		150MHz~800MHz	≥10dB
		800MHz~950MHz	≥60dB
		950MHz~1.7GHz	≥40dB
		1.7GHz~2GHz	≥60dB
		2GHz~3GHz	≥40dB
		3GHz~12.75GHz	≥10dB
OOK VSWR	DC / OOK port	2.175MHz+/-400KHz	≤2
	ANT port	2.175MHz+/-400KHz	≤2
OOK insertion loss	DC/OOK port → ANT port	2.175MHz+/-400KHz	≤0.5dB
Current handling	DC/OOK port → ANT port		≤2300mA
Voltage range	DC/OOK port → ANT port		10V~15V
Voltage reduction	DC/OOK port → ANT port (when the current is 2.3A)		≤1V

MECHANICAL SPECIFICATIONS

Dimension HxWxD mm (body)	66x43x38mm
Weight	<0.45 kg
Colors	Light grey
Connectors	RF parts:DIN 7/16 Female and male. OOK connector:SMA female commector

ENVIRONMENTAL SPECIFICATIONS	
Temperature Range	-40°C to +65°C
Operational	ETS 300 019-1-4
Transportation	ETS 300 019-1-2
Storage	ETS 300 019-1-1
Lightning Protection	IEC61000-4-5
Housing	Aluminum
MTBF	>500,000 hours per TMA
Ingress Protection	IP66(Water jetting test)

APPROVAL AND TESTS	
Safety	EN 60950

Part Number	Connector/ DC Configuration		
	Port1 Connector(BTS)	Port2 Connector(ANT)	Port3 Connector(SMA)
TYBT-0822O	Male	Female	Female
TYBT-0822	Female	Male	Female

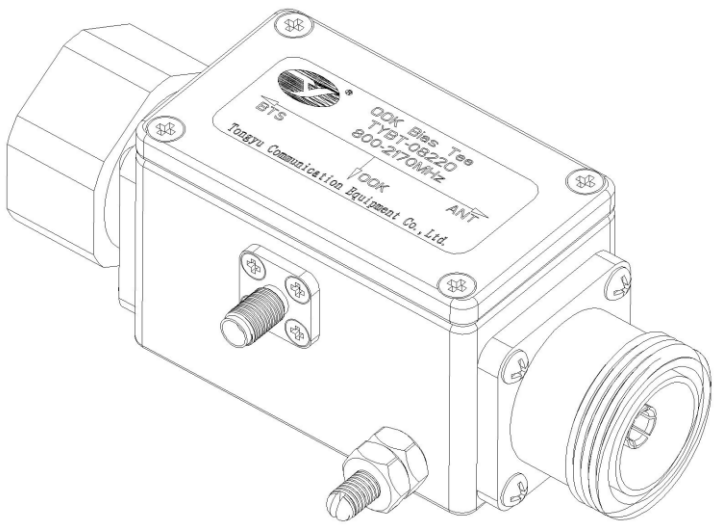

TYT-C024D001(F1V2)

900/1800/2100/2600 Outdoor/Indoor Quad band combiner

ELECTRICAL SPECIFICATIONS	
Frequency Range (MHz)	800-2170
Return Loss(dB)	≥20.8
Insertion Loss (dB)	≤0.15
DC Current,(Max)	2.5A
ntermodulation 2x43 dBm Tx carriers dBm (Normal test GSM900 and GSM1800 IMD)	<-155 dBc(TX:869-894 ,IM3 at 844MHz) customer options GSM850 <-155 dBc(TX:935-960 ,IM3 at 910MHz) customer options GSM900/EGSM900 <-155 dBc(TX:1805-1880 ,IM3 at 1730MHz) customer options GSM1800 <-155 dBc(TX:1930-1990 ,IM3 at 1870MHz) customer options PCS1900 <-155 dBc(TX:2110-2170 ,IM7 at 1930MHz) customer options UMTS2100
Power Consumption	@12/24 VDC
Peek Power	≥58.6 dBm

MECHANICAL SPECIFICATIONS	
Dimension HxWxD mm (body)	74x74x61.5mm
Weight	<0.75 kg
Colors	Light grey
Connectors	RF parts:DIN 7/16 Female and male. AISG connector:5 pin Multi-pole female/ male commector
Mounting Kit	Mounting kit for pole and wall included

ENVIRONMENTAL SPECIFICATIONS	
Temperature Range	-40°C to +65°C
Operational	ETS 300 019-1-4
Transportation	ETS 300 019-1-2
Storage	ETS 300 019-1-1
Lightning Protection	IEC61000-4-5
Housing	Aluminum
MTBF	>500,000 hours
Ingress Protection	IP66(Water jetting test)

APPROVAL AND TESTS	
Safety	EN 60950

Part Number	Connector/ DC Configuration		
	Port1 Connector	Port2 Connector	Port3 Connector
TYBT-0822S –XX-MMF	Male	Male	Female
TYBT-0822S –XX-MFF	Male	Female	Female
TYBT-0822S –XX-FFF	Female	Female	Female
TYBT-0822S –XX-FMF	Female	Male	Female
TYBT-0822S –XX-FFM	Female	Female	Male
TYBT-0822S –XX-FMM	Female	Male	Male
TYBT-0822S –XX-MMM	Male	Male	Male
TYBT-0822S –XX-MFM	Male	Female	Male

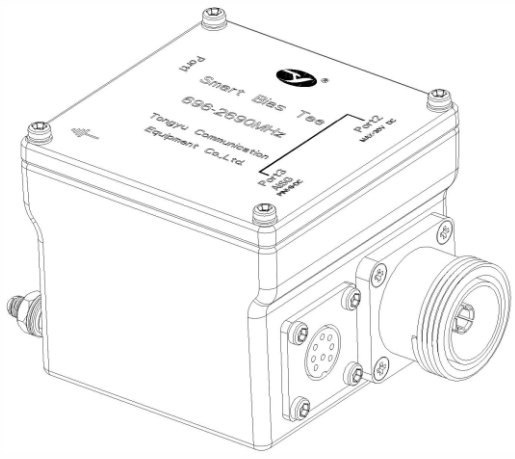

Indoor Combiner

Indoor Combiner	
TY-CDC0727-08-N	110
TY-CPS0727-02-N	111
TY-CDC0727-08-N	112

TY-CDC0727-08-N

Cavity Directional Coupler

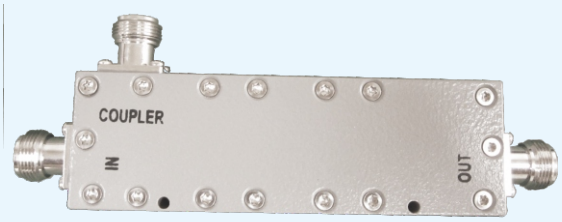

ELECTRICAL SPECIFICATIONS	
Type	TY-CDC0727-08-N
Frequency Range (MHz)	698-2700
VSWR	≤1.18
Coupling (dB)	8±0.6
Isolation between ports (dB)	≥29
Couping tolerance(dB)	±1
Insertion loss (dB)	≤1.2
Intermodulation(dBc)	≤-140
Power Rating (W)	200
Impedance(Ω)	50

MECHANICAL SPECIFICATIONS	
Dimension (H x W x D) (mm)	164.5x 58.5 x 21
Packing dimension (H x W x D) (mm)	180 x 68x 25
Net Weight(kg)	0.25
Packed Weight(kg)	0.281
Temperature Range (□)	-25 to 75
Applications	IP65
Connector	N female
Mounting Brackets	No

TY-CPS0727-02-N

Coaxial Power Splitter

ELECTRICAL SPECIFICATIONS	
Type	TY-CPS0727-02-N
Frequency Range (MHz)	698-2700
Division	2
Division loss(dB)	3
VSWR	≤1.2
Insertion loss (dB)	≤0.2
Intermodulation(dBc)	≤-140
Power Rating (W)	300
Impedance(Ω)	50
FIT (ppm / year)	500

MECHANICAL SPECIFICATIONS	
Dimension (H x W x D) (mm)	214.5x 60.5 x 25
Packing dimension (H x W x D) (mm)	225 x 73x 30
Net Weight(kg)	0.199
Packed Weight(kg)	0.229
Temperature Range (□)	-25 to 75
Applications	IP65
Connector	N female
Mounting Brackets	No

TY-CDC0727-08-N

Cavity Directional Coupler

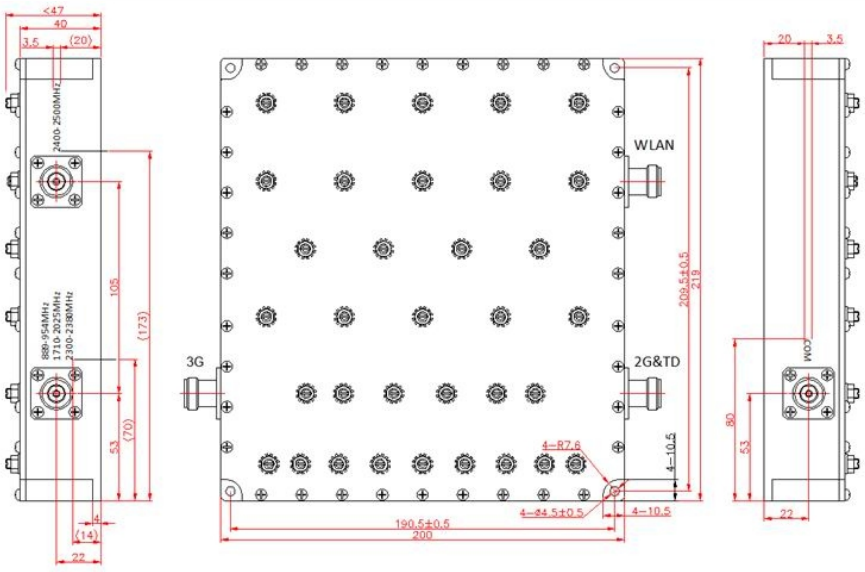

ELECTRICAL SPECIFICATIONS

Type	TY-MBC-TD2504
Getway 1(PORT1～COM) (MHz)	888-955/1709-2026/2299-2381
Getway 2(PORT1～COM) (MHz)	2399-2501
VSWR	≤1.3
Isolation between ports (dB)	≥82
Insertion loss (dB)	≤0.75
Intermodulation(dBc)	≤-132
Ripple(dB)	≤0.6
Power Rating (W)	300

MECHANICAL SPECIFICATIONS

Dimension (H x W x D) (mm)	245x219x40
Packing dimension (H x W x D) (mm)	275x250x70
Applications	IP64
Connector	N female

AISG2.0 REMOTE CONTROL COMPONENT

AISG2.0 REMOTE CONTROL COMPONENT	
TY-RCUB20(F1V3)	114-115
TY-RCUB20(F1V4)	116-117
TY-HCUB20	118-120
TY-CCUA20	121-122

TY-RCUB20(F1V3)

Remote Control Unit for Tongyu VET (Variable Electrical Tilt) base station antennas with adjustable downtilt and appropriate mechanical interface.

ELECTRICAL SPECIFICATIONS	
Product number	TY-RCUB20 (F1V3)
Standard	AISG 2.0/3GPP release 6
Input voltage range	10-30V DC (pin 6 only)
Power consumption (idle)	<1W
Power consumption (tilting)	<9W
Connectors	2 x 8 pin connector according IEC 60130-9; conforming to AISG2.0 Daisy chain in: male; Daisy chain out: female
Hardware interfaces	RS 485A/B (pin 5, pin 3); power supply (pin 1, pin 6); DC return (pin 7); conform to AISG2.0
Data rate	9.6 kbps
Adjustment time (full range)	40sec (typically, depending on antenna type)
Adjustment cycles	> 50,000

MECHANICAL SPECIFICATIONS	
Dimensions(mm)	152 × 64 × 48(without connectors)
Packing size(mm)	240 × 105 × 85
Weight(kg)	0.8
Housing Material	Profile: Aluminum, coated Connector: Aluminum with polyester powder, coated varnished housing (P-7601A, light gray)

ENVIRONMENTAL SPECIFICATIONS	
Temperature Range	-40°C to +65°C
Protection class	IP 65

Features:

-Compact size
-Suitable for daisy chain connection
-Easy attachment without dismantling antennas
-Accurate adjustable downtilt
-Support customized solution

Notes:

-Pin 1 of RS485 connector is not used
-Install RCU according to installation manual
-Keep the protection cap of the chain out socket if not used

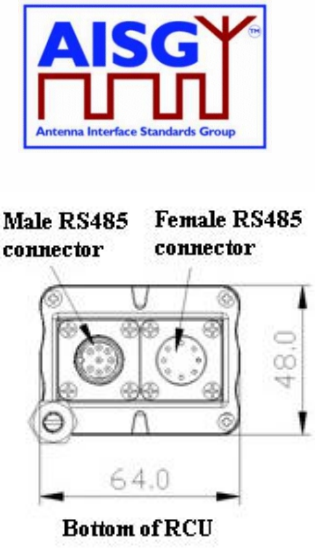

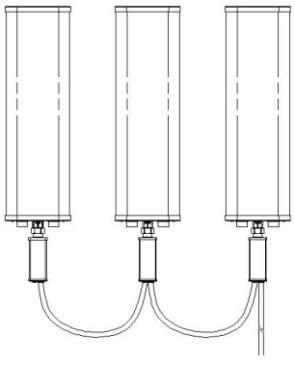

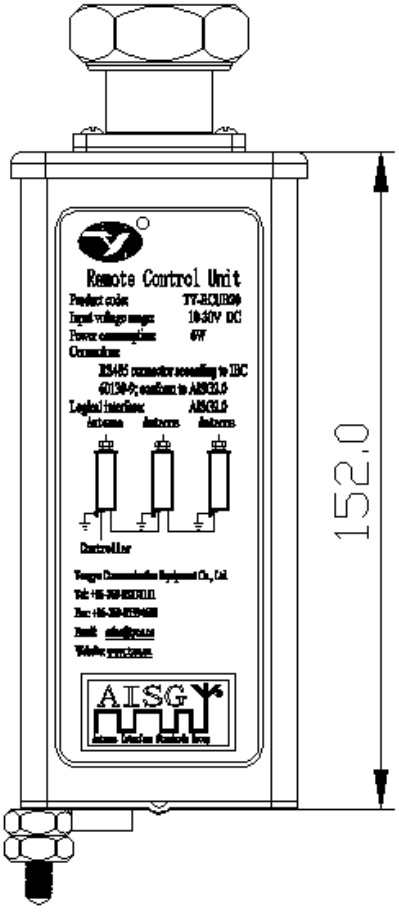

TY-RCUB20(F1V4)

Remote Control Unit for Tongyu VET (Variable Electrical Tilt) base station antennas with adjustable downtilt and appropriate mechanical interface.

ELECTRICAL SPECIFICATIONS	
Product number	TY-RCUB20 (F1V4)
Standard	AISG 2.0/3GPP release 6
Input voltage range	10-30V DC (pin 1 and pin 6)
Power consumption (idle)	<1W
Power consumption (tilting)	<6W
Connectors	2 x 8 pin connector according IEC 60130-9; conforming to AISG2.0 Daisy chain in: male; Daisy chain out: female
Hardware interfaces	RS 485A/B (pin 5, pin 3); power supply (pin 1, pin 6); DC return (pin 7); conform to AISG2.0
Data rate	9.6 kbps
Adjustment time (full range)	45sec (typically, depending on antenna type)
Adjustment cycles	> 50,000

MECHANICAL SPECIFICATIONS	
Dimensions(mm)	160×48.5×50
Packing size(mm)	195×85×75
Weight(kg)	0.36
Housing Material	Profile: Aluminum, coated Connector: Aluminum with polyester powder, coated varnished housing (RAL 7035, orange gray)

ENVIRONMENTAL SPECIFICATIONS	
Temperature Range	-40°C to +65°C
Protection class	IP 65

Features:

-Miniaturized size
-Suitable for daisy chain connection
-Easy attachment without dismantling antennas
-Accurate adjustable downtilt
-Support customized solution

Notes:

-Pin 1 and pin 6 of RS485 connector is connected together
-Install RCU according to installation manual
-Keep the protection cap of the chain out socket if not used

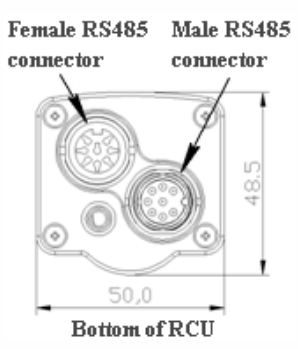

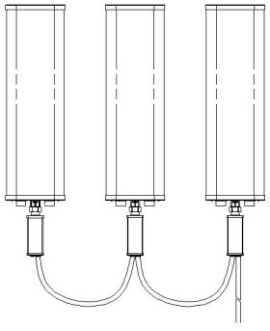

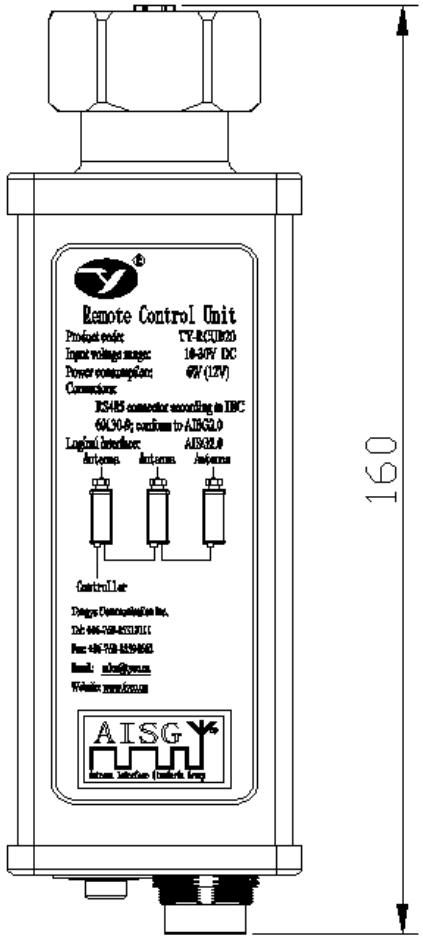

TY-HCUB20

HCU (Hand-held Control Unit) is a portable control unit for tilt adjustable antennas. It is designed with compatibility of the standard of AISG v1.1/v2.0 protocol. It can be used to power and control the RCU (Remote Control Unit) of tilt adjustable antennas. This product is an easy-to-carry controller with a built-in rechargeable battery. It is suitable for in-site installation, tilting and maintenance of tilt adjustable antennas.

ELECTRICAL SPECIFICATIONS

Power supply	Input: 15V DC 1.5A(AC/DC adapter) Output: 15V DC 1.5A(AC/DC adapter)/ 12V DC 1.5A (rechargeable battery)		
Rechargeable battery	Li-polymer (12V 2000mAh), > 300 cycles		
AISG connector	RS485(female) x 2, conforming to IEC 60130-9 and AISG 8-pin connector	Pin 1, Pin 6	DC(+15V)(AC/DC adapter)
			DC(+12V)(rechargeable battery)
		Pin 3	RS485 B
		Pin 5	RS485 A
		Pin 7	DC return

MECHANICAL SPECIFICATIONS

Weight	0.36 kg(with rechargeable battery)
Dimensions	168mm x 90mm x 44mm
Material	ABS

ENVIRONMENTAL SPECIFICATIONS

Operating temperature	10°C to +55°C
Storage temperature	40°C to +65°C
Storage humidity	5% ~ 95%
Life	3 years

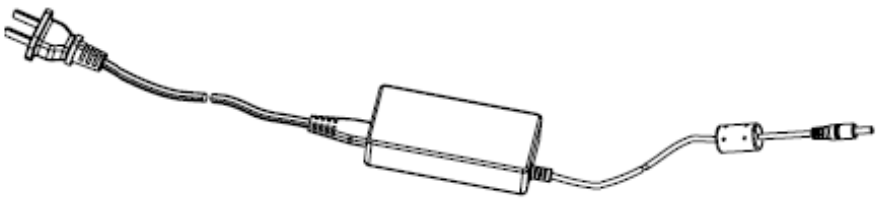

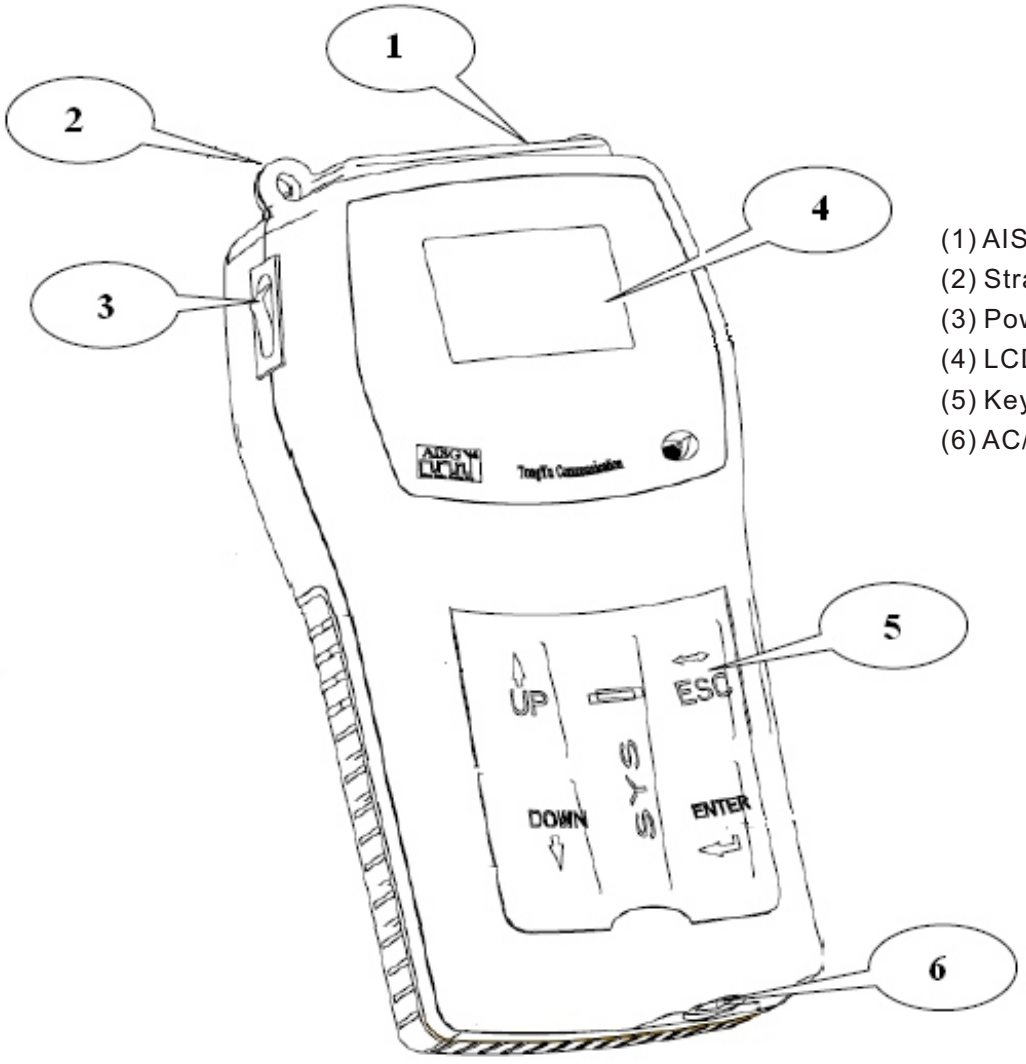

(1) AISG Cable Connector
(2) Strap Hole
(3) Power Switch
(4) LCD Display
(5) Keyboard
(6) AC/DC Adapter Input

AISG2.0 REMOTE CONTROL UNIT

Functions:

-Tilt control (GetTilt, SetTilt, Calibrate, SelfTest) for tilt adjustable antennas
-Information acquirement (Software and Hardware Version, Antenna Model, Operating Bands, Beamwidth, Gain, Adjust Scope, Antenna Bearing) from RCU
-Alarm manage(GetAlarmStatus, ClearAlarms)
-Power detect and indicate
-AISG1.1/2.0 compatibility

Notes:

-It ONLY supports to RCU of appointed vendor
-The maximum number of RCUs controlled by HCU and the amount of AISG cable length depend on losses suffered along the cables. A maximum of 6 RCUs with 50m of AISG cable is acceptable
-DO NOT use it outdoor during a lightning storm as it is NOT designed for waterproof and lightningproof
-It is designed to withstand nominal shock or impact. However, DO NOT drop, throw, or hit while carrying or operating
-The built-in rechargeable battery is Li-Polymer, excessive over-charge or discharge may degrade the performance and the life of the battery
-To recharge the built-in battery or use AC power, use the AC/DC adapter supplied by Tongyu ONLY
-If there is not enough battery power, or raising a “LOW BATTERY” alarm, please stop operating, and connect external power source before restart and operating it again
-DO NOT interrupt the external power source during operating

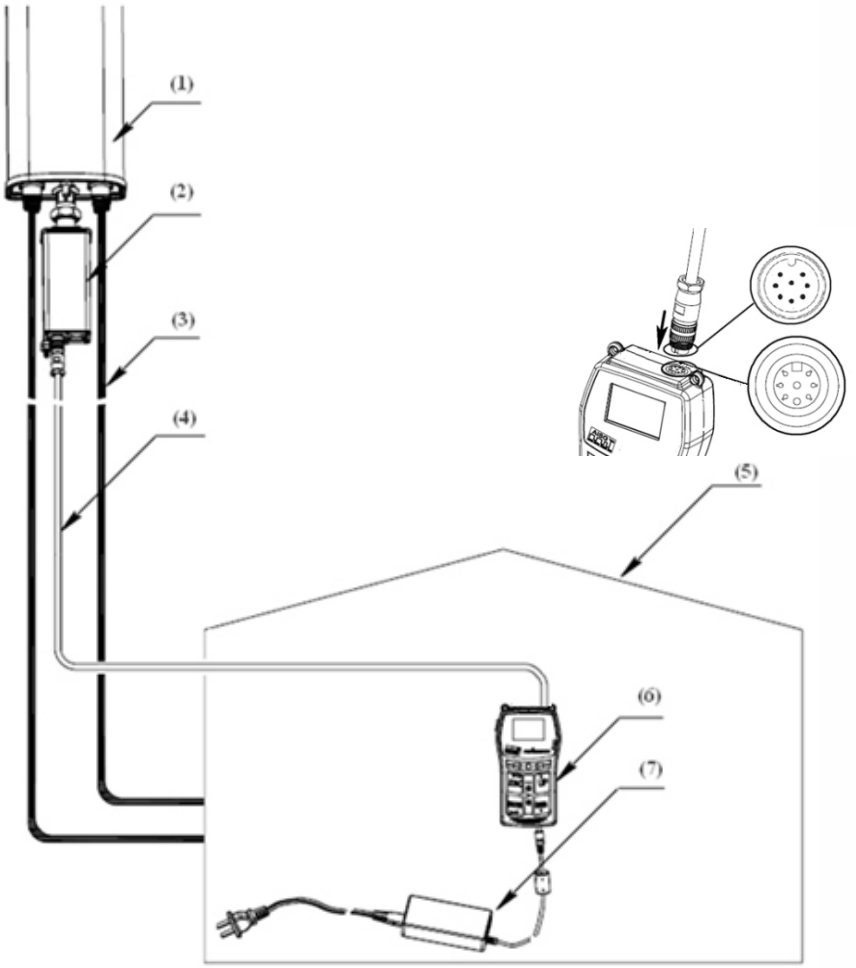

(1) Tilt Adjustable Antenna
(2) RCU
(3) RF Feeder Cable
(4) AISG Cable
(5) Site
(6) HCU
(7) AC/DC Adapter

TY-CCUA20

CCU (Center Control Unit) is used as an compact AISG device controller. It is compatible to AISG type of antenna with electrical adjustment capability (such as RCU) or TMA (Tower Mounted Amplifiers) with built-in control and management functions. CCU provides web interface connected via Ethernet for performing remote antenna adjustment or TMA at any location.

ELECTRICAL SPECIFICATIONS

Power supply	Input: -48V DC 1.35A(max) Output: +24V DC 2.0A(max)/+12V DC 3.0A (max)		
AISG connector	RS485(female) x 2, conforming to IEC 60130-9 and AISG 8-pin connector	Pin 1	DC(+15V)(AC/DC adapter)
		Pin 6	DC(+12V)(rechargeable battery)
		Pin 3	RS485 B
		Pin 5	RS485 A
		Pin 7	DC return
Protocol to AISG devices	HDLC hex-coded command set, according to AISG1.1/ AISG2.0 with data rate of 9.6kbps		
Network connector	Ethernet(10 Base-T) x 1		
Network protocol	TCP/IP, SNMP, FTP, Telnet		
Console port	DB9 RS232 x 1		

ENVIRONMENTAL SPECIFICATIONS

Operating temperature	0°C to +60°C
Operating humidity	20% to 90% non-condensing

MECHANICAL SPECIFICATIONS

Mounting	Wall/1U rack mountable
Weight	1.5 kg(approximate)
Dimensions	220mm x 185mm x 44.4mm

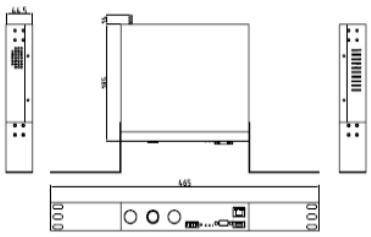

Rack/Add Ear

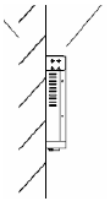

Wall/Side

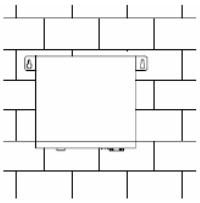

Wall/Front

Functions:

-AISG antenna adjustment/management (Antenna electrical downtilt setting, Antenna calibration, Maintenance of antenna data)
-AISG TMA adjustment (TMA gain setting, TMA mode setting)
-Site management
-System setting
-Account management

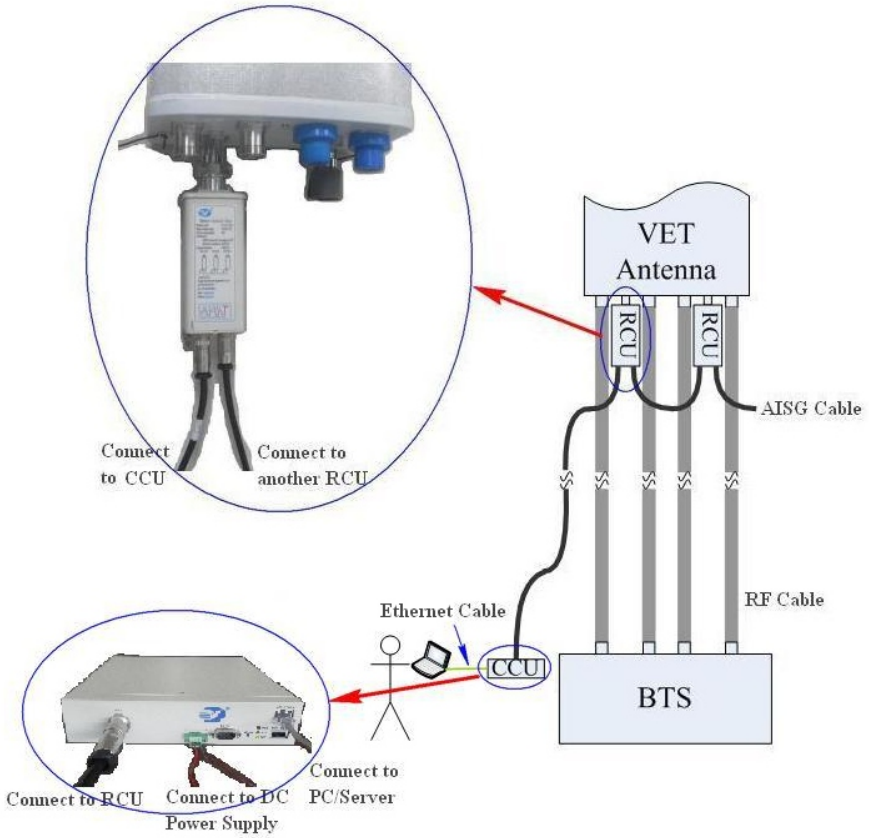

APPLICATION EXAMPLE

APPLICATION EXAMPLE	
TMA APPLICATION	124
COMBINER APPLICATION	125
RCU APPLICATION	126-128
HCU APPLICATION	129
CCU APPLICATION	130

TMA APPLICATION

Equipment List

BiasTee injector	TYBT-0822O TYBT-0822	Power supply to TMA via RF cable at BTS port
TMA	TY-GSM1900-12-CWA	Duplex full band Twin TMA
Power Distribution Unit (PDU)		–40V~60V DC input, +12V DC output,6ways output plus low current, over current alarm indication.

Connection Method

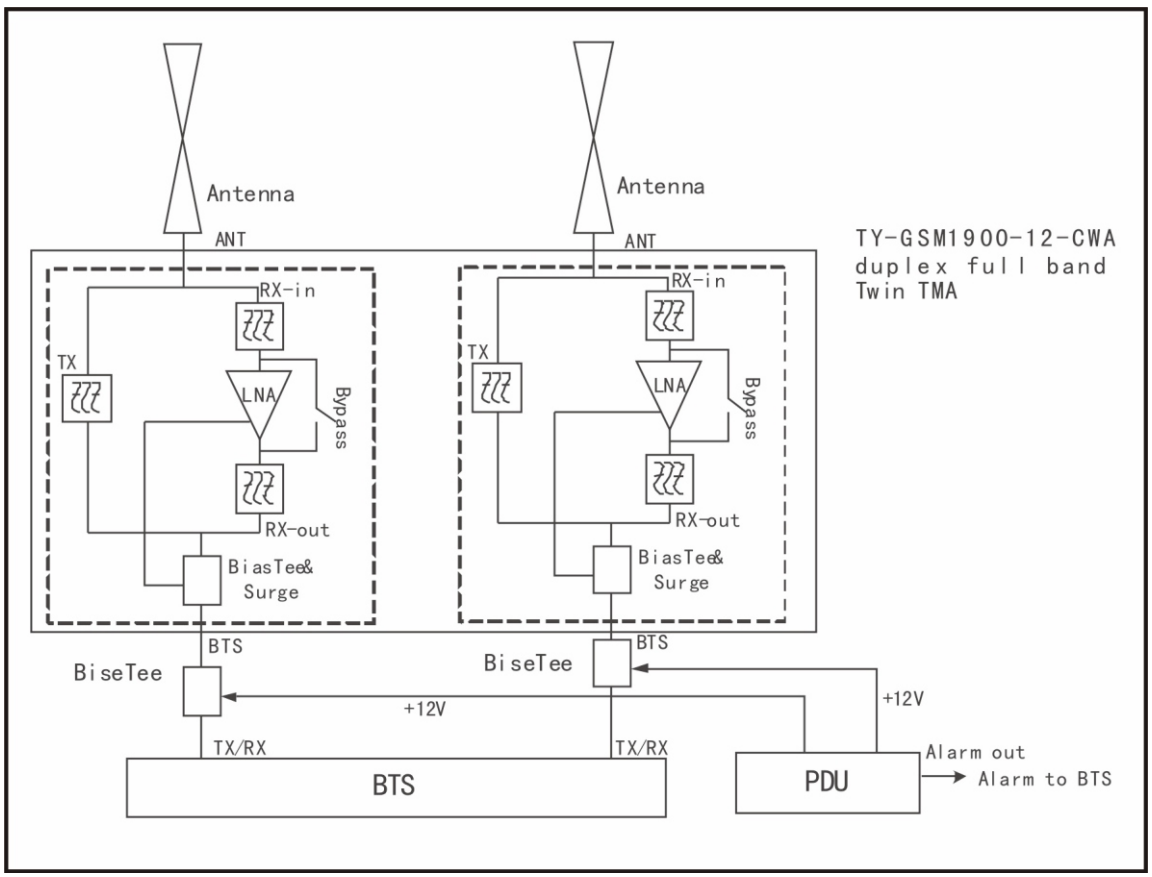

Figure 1 TY-GSM1900-12-CWA Twin TMA Typical Application

COMBINER APPLICATION

Typical Application Example

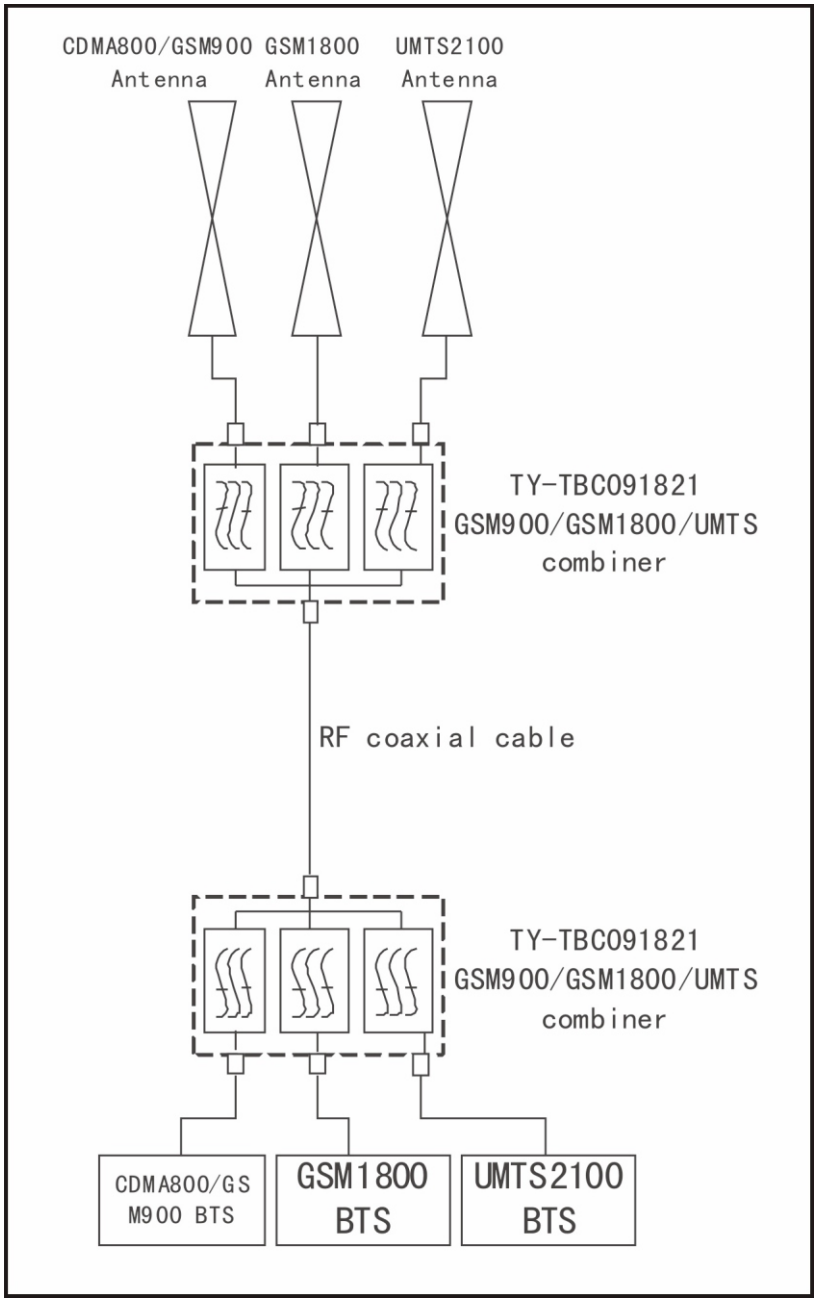

Figure 1 TY-TBC091821 Indoor/Outdoor Crossband Triplexer Typical Application

RCU APPLICATION

1.Parallel Connection Illustration

2 ports antenna parallel connection mode

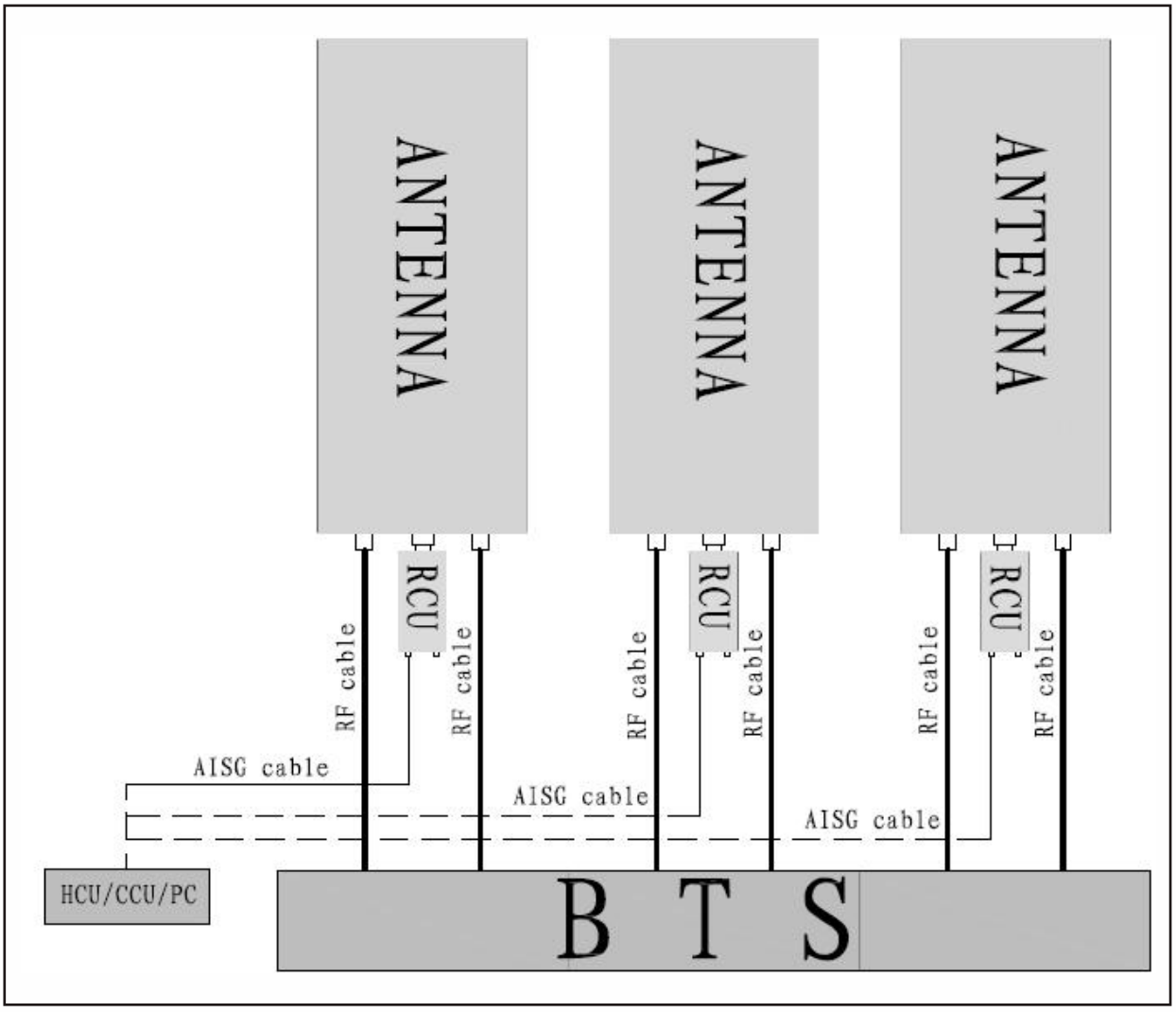

Note: the above drawing shows the parallel connection mode of the 3-sector VET antenna.

The following table shows the related configuration:

Equipment	Quantity	Unit	Explanation
VET Antenna (2 ports)	3	piece	-
RCU	3	Piece	Conform to AISG1.1/AISG2.0
AISG Cable	3	Piece	The length depends on the height of antenna tower(30m/40m/50m)
HCU/PC/CCU	1	Piece	HCU & PC is configured for O&M person. One CCU is for site which provides integrated OMC.

4 ports antenna parallel connection mode

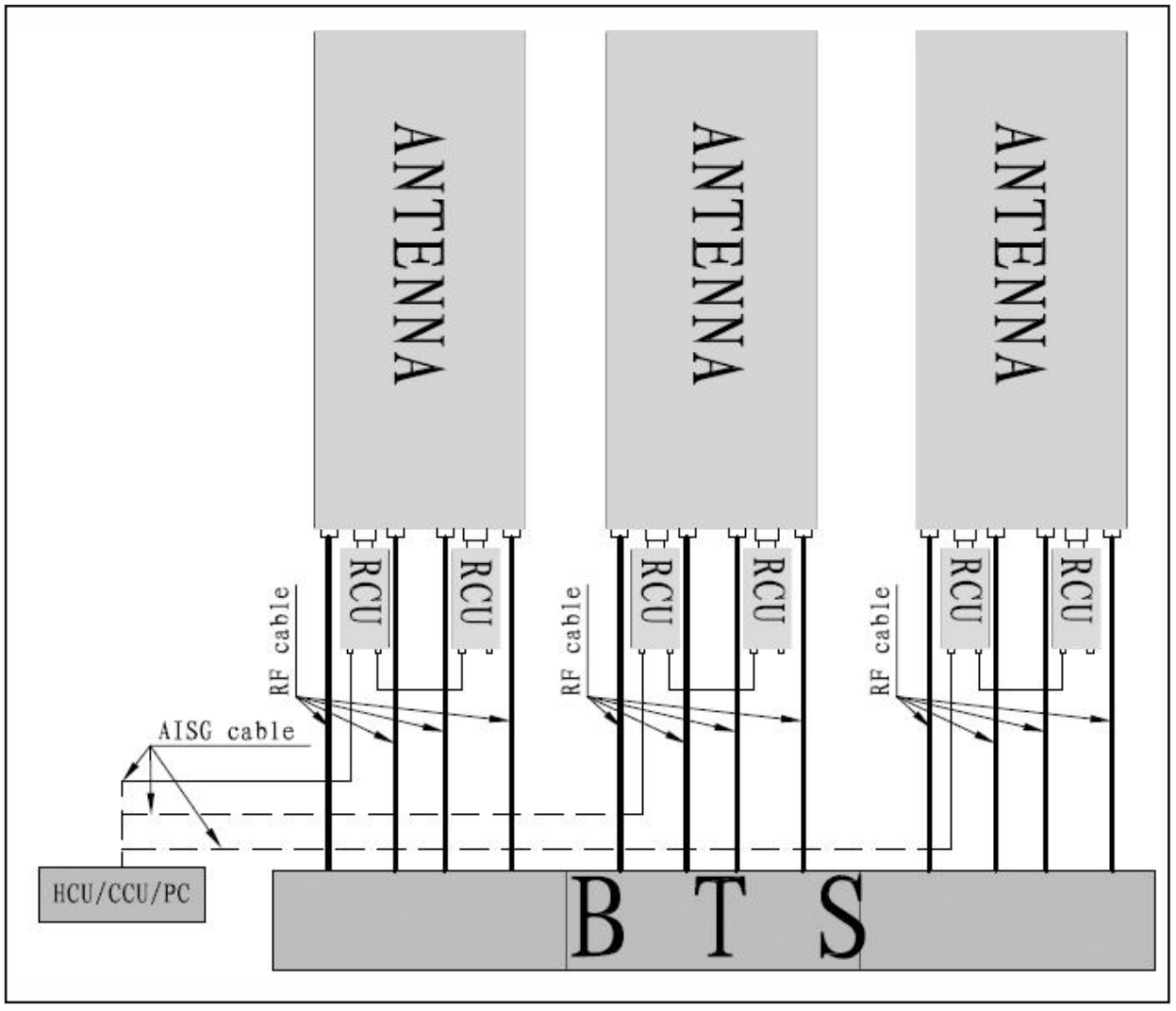

Note: the above plan shows the parallel connection mode of 3-sector & 4 ports VET antenna.

The following table shows the related configuration:

Equipment	Quantity	Unit	Explanation
VET Antenna (4 ports)	3	piece	-
RCU	6	Piece	Conform to AISG1.1/AISG2.0
AISG Cable	6	Piece	The length depends on the height antenna tower(30m/40m/50m)
HCU/PC/CCU	1	Piece	HCU & PC is configured for O&M person. One CCU is for site which provides integrated OMC.

6 ports antenna parallel connection mode

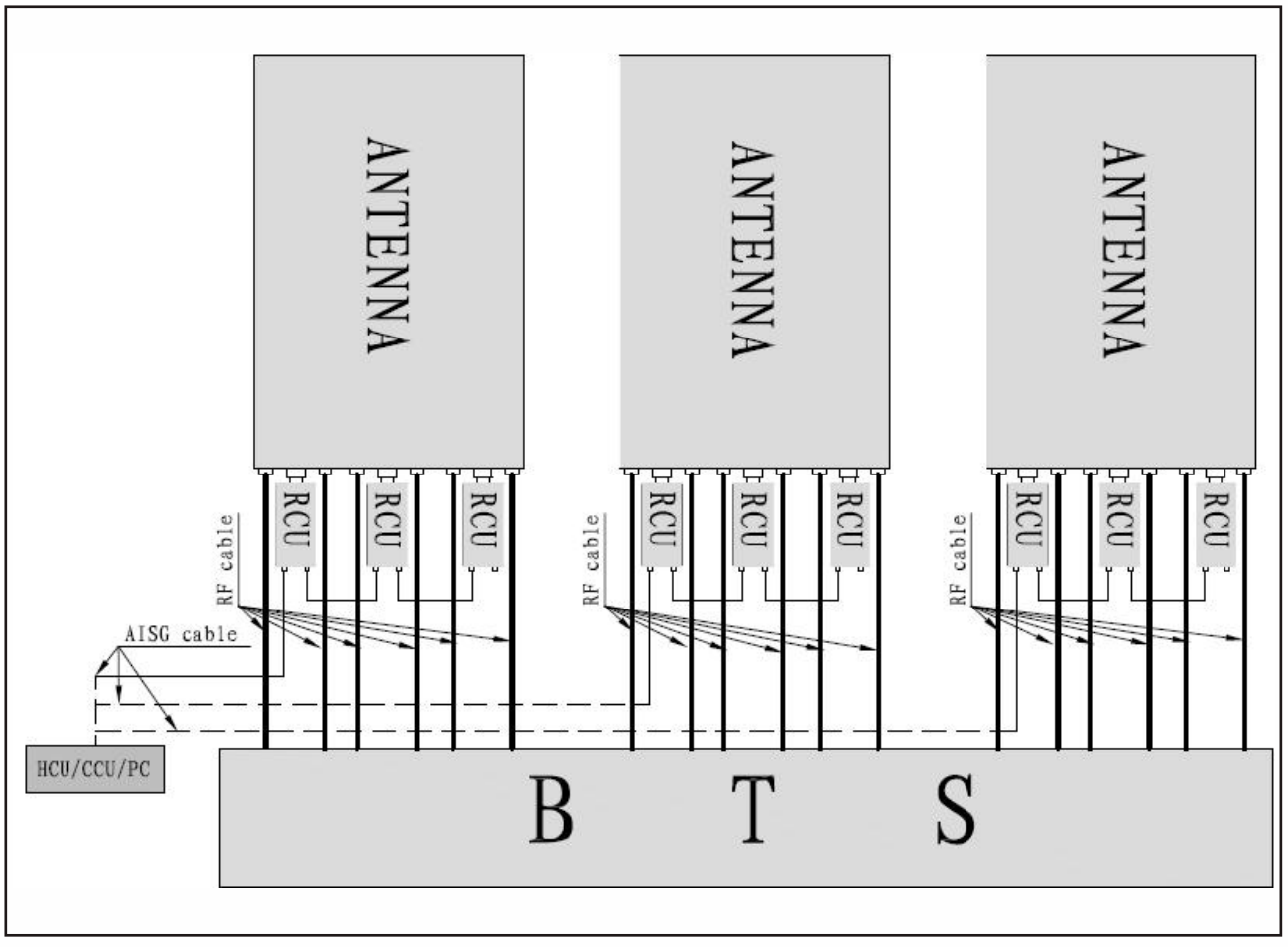

Note: the above plan shows the parallel connection mode of the Tri-Sector VET Antenna.

The following table shows the related configuration:

Equipment	Quantity	Unit	Explanation
VET Antenna (6 ports)	3	piece	-
RCU	9	Piece	Conform to AISG1.1/AISG2.0
AISG Cable	9	Piece	The length depends on the height of antenna tower(30m/40m/50m)
HCU/PC/CCU	1	Piece	HCU & PC is configured for O&M person. One CCU is for site which provides integrated OMC.

HCU APPLICATION

Connection Method

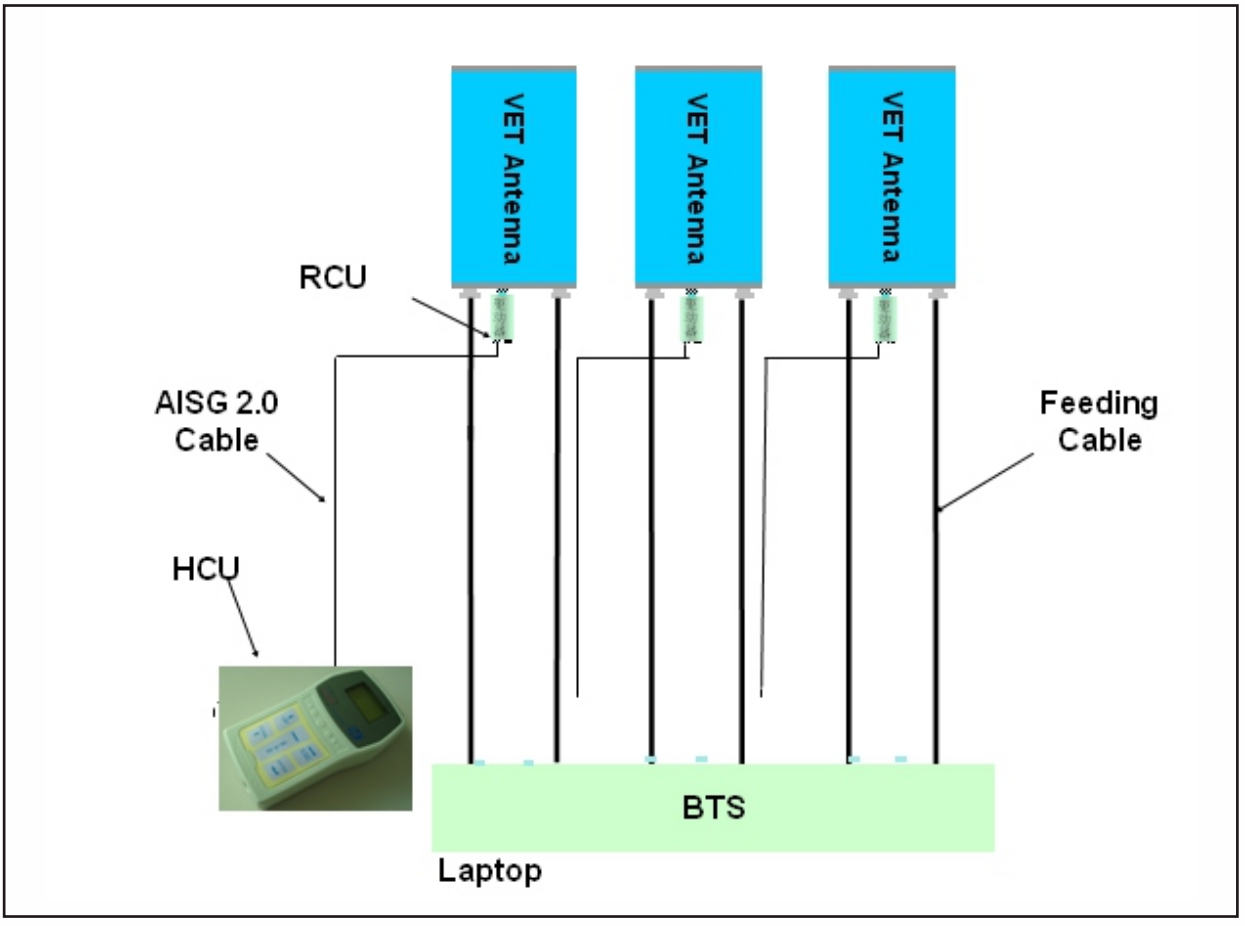

CCU APPLICATION

Connection Method

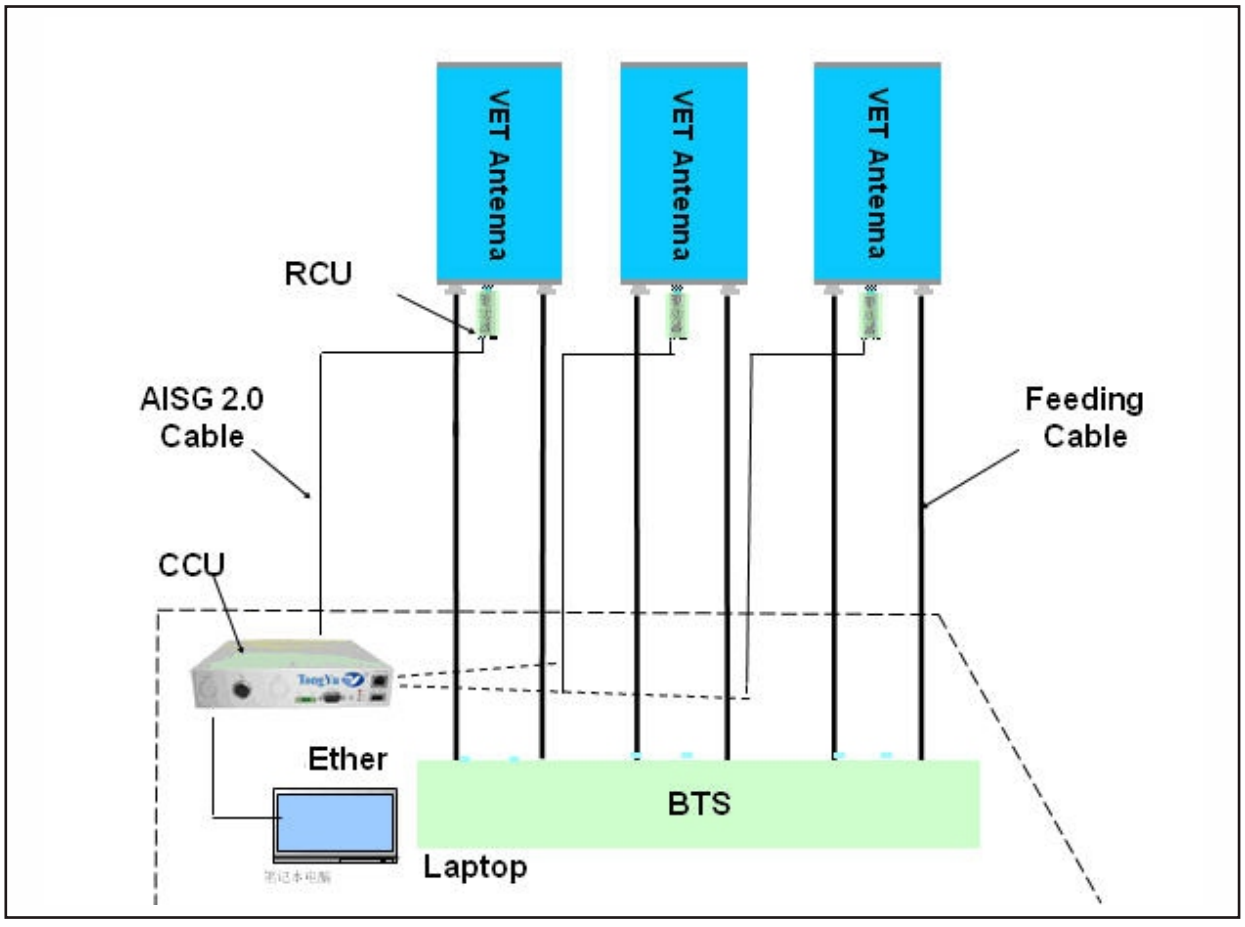

MICROWAVE PRODUCTS
2014

Headquarters:
Address: 9#-1 Torch Rd, Torch High-Tech Development Zone,
Zhongshan, Guangdong, China
Tel:+86-760-85312820,85312825,85312791(International business)
Fax: +86-760-85594662
Email: sales@tycc.cn
Web Site: www.tycc.cn

Australia Office:
Address: 1, Chatswood Ave, Chatswood, NSW 2067. Australia
Tel: +61-2-99047672
Fax: +61-2-99047068
Email: aucom@optusnet.com.au

America Office:
Address:1440 Broadway Suite 1001, Oakland, CA 94612. USA
Tel:+15104883645; +15106816927
Fax:+15106624763
Email: richard@tycc.cn